THE INFLUENCE OF FOUNDATION COUPLING ON THE DYNAMIC RESPONSE OF SIMPLE STRUCTURES

JOHN GORDON HAMMER

Thesis
H165

Li...y
U. S. Naval Postgraduate School
Monterey, California

TK-69
8855

THE INFLUENCE OF FOUNDATION COUPLING ON THE DYNAMIC RESPONSE OF SIMPLE STRUCTURES

BY

JOHN GORDON HAMMER

B.S., United States Naval Academy, 1944
B.C.E., Rensselaer Polytechnic Institute, 1947
M.C.E., Rensselaer Polytechnic Institute, 1948

THESIS

SUBMITTED IN PARTIAL FULFILLMENT OF THE REQUIREMENTS
FOR THE DEGREE OF DOCTOR OF PHILOSOPHY IN CIVIL ENGINEERING
IN THE GRADUATE COLLEGE OF THE
UNIVERSITY OF ILLINOIS, 1954

URBANA, ILLINOIS

Thesis
H165

U.S. Naval Postgraduate School
Monterey, California

THE INFLUENCE OF FOUNDATION COUPLING ON
THE DYNAMIC RESPONSE OF RIGID STRUCTURES

CONTENTS

		Page
I.	INTRODUCTION	
1.1	General Statement of Problem	1
1.2	Purpose	1
1.3	Method of Approach	2
II.	GENERAL DISCUSSION OF VARIABLES AND FUNCTIONS	
2.1	Loading Function	3
2.2	Structure Considered	4
2.3	Soil Characteristics and Interaction with Structure .	4
2.3.1	Vertical Flexibility	5
2.3.2	Horizontal Flexibility	6
III.	ANALYSIS OF RIGID STRUCTURES	
3.1	Analysis of Rigid Rectangular Structure on Soil Deyielding in Vertical Direction	8
3.1.1	Load Applied at Center of Mass	8
3.1.1.1	Zone 1, Overturning, No Sliding . . .	12
3.1.1.2	Zone 2, Sliding, No Overturning . . .	15
3.1.1.3	Zone 3, Overturning and Sliding . . .	17
3.1.2	Effect of Varying Point of Application of Load	19

23004

ESDH

CONTENTS (Concluded)

		Page
3.2	Analysis of Flexible Rectangular Structure on Soil Unyielding in Vertical Direction, Load Applied at Center of Mass	24
	3.2.1 No Sliding and No Overturning	27
	3.2.2 Approximate Distance Structure Will Slide	28
3.3	Analysis of Rigid Rectangular Structure on Soil Yielding Vertically, Load Applied at Center of Mass	30
	3.3.1 Phase 1 Depression of Front Toe With Rear Toe Not Lifted	32
	3.3.2 Phase 2 Overturning About Front Toe	35
	3.3.3. Maximum Rotation Compared to Structure on Rigid Ground	36
IV.	SUMMARY AND CONCLUSIONS	
4.1	Summary	43
4.2	Conclusions	45
APPENDIX A.	NOMENCLATURE	46
APPENDIX B.	BIBLIOGRAPHY	50
APPENDIX C.	FIGURES C-1 through C-5	51
VITA		57

LIST OF FIGURES

		Page
Fig. 2-1	Load Characteristics	7
Fig. 2-2	Rigid Structure	7
Fig. 2-3	Flexible Structure	7
Fig. 2-4	Vertical Soil Deformability	7
Fig. 3-1	Structure at Rest and Structure Displaced	41
Fig. 3-2	Force Diagram, Coordinates Referred to Center of Mass	41
Fig. 3-3	Force Diagram, Coordinates Referred to Point Toe	42
Fig. 3-4	Point of Application of Load	42
Fig. 3-5	Force Diagram for Flexible Structure	43
Fig. 3-6	Resistance of Structure to Horizontal Deformation	43
Fig. 3-7	Resistance of Ground to Sliding of Structure	43
Fig. 3-8	Planes of Overturning for a Structure on Equivalent Springs	44
Fig. 3-9	Structure Having Less Maximum Rotation on Non-Rigid Ground and on Rigid Ground	44
Fig. C-1	Influence of Coefficient of Resistance on Sliding and Overturning, Rigid Structure on Rigid Ground	51
Fig. C-2	Maximum Overturning which Will Occur for a Rigid Structure on Rigid Ground, No Sliding	52
Fig. C-3	Maximum Sliding Distance for Rigid Structure on Rigid Ground, No Overturning	53

LIST OF FIGURES (Continued)

Fig. C-4 Influence of Structure Shape and Point of Load 54
Application on the Nature of Horizontal Ground Reaction, Rigid Structure on Rigid Ground

Fig. C-5 Approximate Maximum Rotation of a Rigid Structure 55
Restrained from Sliding, Given Load Applied at Varying Points

Fig. C-6 Values of Pulse Magnitude and Duration Which Will 56
Cause Rock Toe to Lift for a Rigid Structure on Yielding Ground

ACKNOWLEDGEMENT

The writer wishes to express his sincere appreciation to Doctor E. M. Lounsbury, Research Professor of Structural Engineering, for his criticism, encouragement, and patience.

THE INFLUENCE OF FOUNDATION COUPLING ON THE DYNAMIC BEHAVIOR OF SIMPLE STRUCTURES

1. INTRODUCTION

1.1 General Statement of Problem

This dissertation is concerned with the manner in which the resisting properties of a structure are influenced by the interaction between the structure and its foundation.

When a dynamic load acts upon a structure, the force of the load causes the structure to move externally or deform internally until the energy imparted to it is used up, or until the structure fails. The internal resistance offered by the structure depends upon the strength and rigidity of joints and connections as well as of individual members. Thus a structure can absorb energy by deformation or deflection. Any structure has a limit to the amount of energy it can absorb without failure. Even when a structure does not fail by internal deformation, it may be unsatisfactory if it is overturned or moved bodily. Therefore, a study of external motions is also of importance.

1.2 Purpose

The purpose of this dissertation is to study the manner in which a simple structure behaves under various conditions of simple dynamic loading and various conditions of foundation restraint.

2. [illegible]

2.1 [illegible]

[illegible]

[illegible]

[

1.3 Method of Approach

The method of approach to the problem is analytical. The controlled parameters are discussed in Section II. Section III contains the equations and solutions as well as the assumptions made. Section IV contains the summary and conclusions; Appendix C contains graphs of some of the results.

Each symbol is defined where first used; and for convenience, a summary of all symbols is given in Appendix A.

II. GENERAL DISCUSSION OF VARIABLES AND PARAMETERS

The parameters of the problem fall into three general groups: those characteristic of the loading function; those characteristic of the structure; those characteristic of the soil and its interaction with the foundation.

2.1 The Loading Function

The load is a result of a lateral time-dependent pressure acting on the structure. The load is represented by the force P_1 which is a concentrated force, dependent on time, and always equivalent to the resultant of the pressures at any instant. The point of application of the equivalent load P_1 is considered constant during any given dynamic loading. The point of application is one of the parameters studied.

Obviously there are a great number of shapes of load-time curves which could be used. The choice is a compromise between accuracy and expediency. Moreover, too much accuracy would be unwarranted in view of the approximate nature of other quantities entering the problem.

For the purpose of this study, it is desirable to standardize the shape of the load-time curve so that the effects of changing other parameters can be noted. It is also desirable to choose a shape which will not unduly complicate the calculations. Therefore, a rectangular pulse shape with varying P_1 and varying t_p (duration of pulse) has been used. It is shown in Fig. 2-1.

12. Minimum Requirements for Exclusive Use Occupancies

The requirements of this section shall apply to those exclusive occupancies of the building classified below, in addition to the requirements of the preceding sections of this chapter not in conflict herewith.

12.1 Fire Control Stations

The need for a special or isolated fire-protection service within the building. The need is determined by the floor by which is accommodated there, frequency of fire, and extent required of the protection of key personnel. The extent of availability of the equipment based by a centralized control station for alarm systems. The extent of equipment in use of the protection provided.

Centrally there are a great number of objects of fire-fighting equipment should be used. The station is a convenient distance reducing the time. Generally, the fire control station should be connected to some of the appropriate action of other responsible authority for purposes.

For the purpose of this section, it is necessary to determine the value of the protection which is that the attempt of emergency action for is proper. It is also necessary to determine the relationship between the fire control station and the building. Generally a centralized point where fire control is and service is provided for each case. It is also to be fire.

No direct consideration is given the effect of vertical pressures on the structure. However, since the vertical pressure does not subside as rapidly as the lateral pressure, it can be assumed that the vertical pressure is constant for the entire time that the structure is considered. The weight (mg) of the structure can be made sufficiently large to include the vertical pressure force.

2.2 Structure Considered

The simple structure studied is a rectangular box-shaped one. Its mass can be considered concentrated at a center of mass (c.m.) and it is assumed that the location of the c.m. is known. The weight of the structure is mg. The height of the c.m. is represented by D. D is not necessarily half the height of the structure. The width of the base is 2B. (No effects in the third dimension are considered and the dimension in that direction can be thought of as unity).

In the calculations for overturning, the ratio of B/D is important. This is taken as $\frac{1}{2}$ in some of the sample calculations so that the effects of varying other parameters can be studied.

In the first part of the study the structure is considered to be unyielding or rigid as shown in Fig. 2-2. It is later considered to have some ability to distort as a "shear beam" as shown in Fig. 2-3.

2.3 Soil Characteristics and Interaction with Structure

The determination and prediction of soil mass properties are exceedingly complex even when considering static loading. The dynamic

properties are equally complex, and little information is available. Furthermore, the soil mass properties vary for different localities, and even vary in the same locality at different times. Consequently, in an analytical study such as this, which is both theoretical and approximate, the properties of the soil are extremely over-simplified.

The soil mass will resist the foundation thrust with forces which can be resolved into horizontal and vertical components. It is convenient, then, to define vertical soil dynamic properties and horizontal soil dynamic properties.

2.3.1 Vertical Flexibility

The soil beneath the foundation is represented by two equivalent vertical springs. The springs have a load-displacement relation which is intended to approximate a semi-elastic soil. This is shown in Fig. 2-4. The value K_v is the slope of the force-displacement curve; or in other words, the force exerted by the spring per unit spring compression. It is assumed that the springs cannot exert a tensile force (pull down on the structure).

K_v is a parameter which can vary widely. It is further defined as $mg/2S$, where m is the mass of the structure, g is the acceleration of gravity, and S is the distance that the two springs would each compress under the weight (mg) of the structure. Therefore, S can be thought of as a theoretical initial settlement of the structure which occurs as the structure is placed on the springs.

2.3.2 Horizontal Flexibility

If the structure rests on the ground surface, i.e. no excavation and no initial settlement, the horizontal resistance is largely friction between soil and structure. The coefficient of resistance is designated as the constant parameter f, assumed independent of time and velocity. The weight of the structure is mg; the horizontal resistive force is mgf.

If the structure rests with its foundation below the ground surface, other horizontal resistive forces act: shearing resistance of the soil, cohesive forces between soil and foundation, friction forces.

The nature of the friction forces is uncertain. The plane of slippage is uncertain. The cohesive forces are uncertain.

The various resistive forces all add to make the total resistance to horizontal movement of the structure. The relation of total resistance to horizontal displacement is a function which could have a wide variety of shapes when plotted. It is therefore necessary to make an arbitrary assumption.

Accordingly, the total horizontal resistive force is assumed to be constant and independent of displacement and velocity of movement. It is characterised by a dimensionless coefficient of resistance. The value of f is not limited to values less than unity.

The value f is therefore used to indicate the horizontal resistance regardless of whether the structure rests on the ground surface or rests in an excavation.

LOAD CHARACTERISTICS

FIG 2-1

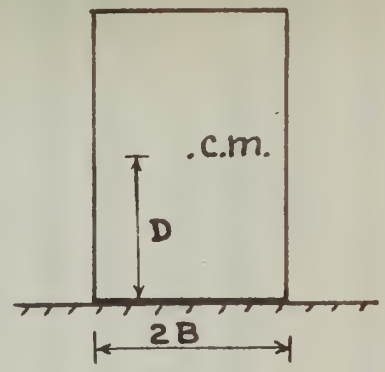

RIGID STRUCTURE

FIG 2-2

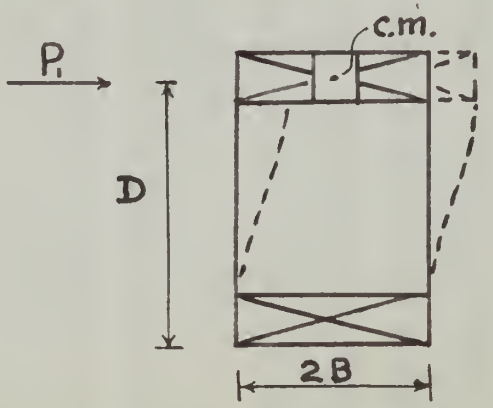

FLEXIBLE STRUCTURE

FIG 2-3

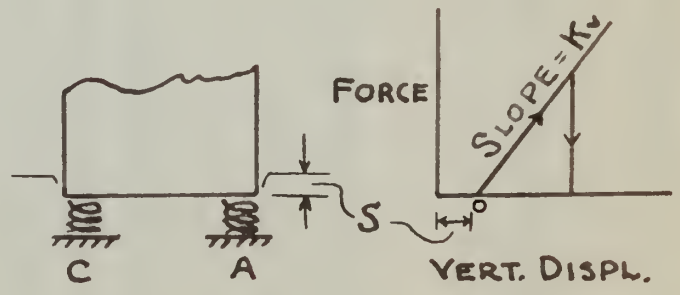

VERTICAL SOIL DEFORMABILITY

FIG 2-4

III. ANALYSIS OF RIGID STRUCTURES

3.1 Analysis of Rigid Rectangular Structure on Soil Unyielding in Vertical Direction

3.1.1 Load Applied at Center of Mass

Under this heading several different cases are considered. They differ in the assumption of the nature of the horizontal resistive force exerted on the structure by the ground.

Since the ground is assumed to be unyielding in the vertical direction, there can be no depression of the structure into the ground. The only possible actions of the structure are: (1) overturning (2) sliding (3) sliding and overturning.

Figures 3-1 through 3-3 show the general conditions for this problem. The structure itself, Fig. 3-1, is rigid and assumed to resist all internal deformation. It is able to slide or overturn. It cannot depress into the ground.

The coordinates x and y designate the absolute displacement of the center of mass of the structure. The coordinates $\bar{x}$ and $\bar{y}$ designate the absolute displacement of the forward toe (A) (i.e. the toe on the side away from that struck by P_1). The angle θ is the measure of the clockwise rotation of the structure from the zero position.

Since the loading is dynamic, the acceleration of the mass of the structure will be an important factor. The change in position of the structure can be described by the change in x, y, θ (or the change in $\bar{x},\bar{y},\theta$). The mass of the structure, considered concentrated at the center

of mass, can move with any or all of the x, y and θ displacements. There will be inertia forces resisting these movements, namely: $m\ddot{x}$, $m\ddot{y}$, and $\rho^2 m\ddot{\theta}$ where:

m = mass of the structure

$\ddot{x} = d^2x/dt^2$

$\ddot{y} = d^2y/dt^2$

$\ddot{\theta} = d^2\theta/dt^2$

ρ^2 = squared radius of gyration of the structure about its c.m.

In Fig. 3-2 these forces $(m\ddot{x}, m\ddot{y}, \rho m\ddot{\theta})$ are shown included in the force diagram. In the equations to follow, this principle of D'Alembert is used.

The equivalent blast force, P_1, is considered to act horizontally on the center of mass. The forcing function was shown in Fig. 2-1.

The horizontal resistive force caused by friction and by other forces between the foundation and soil is assumed constant. It is equal to mgf; where m is the mass of the structure, g is the acceleration of gravity, and f is the coefficient of resistance between soil and foundation. The value of f is not necessarily limited to values less than unity, as would be expected for a coefficient of friction only.

The magnitude of the horizontal resistance force (mgf) will influence the manner in which a given structure responds to a given load. If f is sufficiently large, the force mgf will prevent sliding of the structure regardless of whether or not the structure rotates. The value of f which is just large enough to do this is designated as f_1. On the other hand, if the force mgf is small, there will be a value of f below which sliding occurs with no rotating. Rotation is prevented by the restoring moments

caused by the weight of the structure and by the horizontal inertia force. This value of f is designated as f_2.

1) Determination of an expression for f_1

From Fig. 3-3 we have the following equations of motion:

$$\Sigma H = 0$$

$$P_1 - m(\ddot{\bar{x}} + D\ddot{\theta}) = R_H$$

or $P_1 - mD\ddot{\theta} = R_H$ $\quad \ddot{\bar{x}}=0$ since no sliding

$$\Sigma M = 0 \quad \text{about front toe A}$$

$$P_1(D+B\theta) - mg(B - D\theta) - \bar{\rho}^2 m\,\ddot{\theta} = 0$$

where $\bar{\rho}^2$ is the squared radius of gyration about A

$$\ddot{\theta} - \frac{P_1 B + mgD}{\bar{\rho}^2 m}\theta = \frac{P_1 D - mgB}{\bar{\rho}^2 m}$$

from which

$$\theta = \frac{P_1 D - mgB}{P_1 B + mgD}\left(\cosh\sqrt{\frac{P_1 B + mgD}{\bar{\rho}^2 m}}\,t - 1\right)$$

since at $t=0$, $\theta \& \dot{\theta} = 0$

Differentiating twice with respect to time;

$$\ddot{\theta} = \frac{P_1 D - mgB}{\bar{\rho}^2 m}\left(\cosh\sqrt{\frac{P_1 B + mgD}{\bar{\rho}^2 m}}\,t\right)$$

But

$$R_H = P_1 - mD\ddot{\theta} = P_1 - mD\left(\frac{P_1 D - mgB}{\bar{\rho}^2 m}\right)\left(\cosh\sqrt{\frac{P_1 B + mgD}{\bar{\rho}^2 m}}\,t\right)$$

where R_H is the horizontal force necessary to keep the toe from sliding.

It is seen that R_H is a function of t, and that the maximum value of R_H is necessary when the term $\left(\cosh\sqrt{\frac{P_1 B + mgD}{\bar{\rho}^2 m}}\,t\right)$ is a minimum.

$$\Sigma H = 0$$

$$P_1 - m(\ddot{\bar{X}} + D\ddot{\theta}) = R_H$$

or $\quad P_1 - mD\ddot{\theta} = R_H \qquad \bar{X}=0$ since no sliding

$\Sigma M=0$ about front toe A

$$P(D+E\theta) - mg(\beta - D\theta) - \beta_y^2 m\ddot{\theta} = 0$$

where β_y^2 is the squared radius of gyration about A

$$\ddot{\theta} = \frac{PE + mgD}{\beta_y^2 m}\theta = \frac{PD - mg\beta}{\beta_y^2 m}$$

from which

$$\theta = \frac{P_1\beta + mg\beta}{PD - mgD}\left(\cosh\sqrt{\frac{PE+mgD}{\beta_y^2 m}}\, t - 1\right)$$

since at $t=0$, $\theta \neq \dot{\theta} = 0$

$$\ddot{\theta} = \frac{PD - mg\beta}{\beta_y^2 m}\left(\cosh\sqrt{\frac{PE+mgD}{\beta_y^2 m}}\, t\right)$$

$$R_H = P_1 - mD\ddot{\theta} = P_1 - mD\left(\frac{PD-mg\beta}{\beta_y^2 m}\right)\left(\cosh\sqrt{\frac{PE+mgD}{\beta_y^2 m}}\, t\right)$$

$$\left(\cosh\sqrt{\frac{PE+mgD}{\beta_y^2 m}}\, t\right)$$

Since the minimum value of the cosh function is unity, the maximum R_H required is:

$$R_{H\,max} = P_1 - mD\left(\frac{P_1 D - mgB}{\bar{\rho}^2 m}\right)$$

and the value of f_1 required is:

$$f_1 = \frac{R_H}{mg} = \frac{P_1}{mg} - \frac{D^2}{\bar{\rho}^2}\left(\frac{P_1}{mg} - \frac{B}{D}\right) \qquad (3\text{-}1)$$

The first term, P_1/mg, is the value which would prevent pure sliding. The second term, which is subtracted from the first, is the effect of rotation.

It is also apparent from equation (3-1) that the value of f necessary to prevent sliding is not always less than unity. While it is customary to think of coefficients of friction as being less than unity, it should be remembered that the f as defined herein is a measure of all the horizontal resistance. It may include other effects. It may take an extremely large value of f to prevent sliding for some values of P/mg and B/D, but it is still possible, theoretically at least, to have no sliding .

2) Determination of expression for f_2

Unless a certain amount of frictional resistance is obtained, there will be only sliding and no overturning. θ will remain zero if only sliding occurs.

The equations of motion from Fig. 3-3 are:

$$\Sigma H = 0$$

$$P_1 - m(\ddot{\bar{x}} + D\ddot{\theta}) = R_H$$

and since $\theta = 0$

$$P_1 - m\ddot{\bar{x}} = R_H$$

from which $\bar{x} = \left(\frac{P_1 - R_H}{m}\right)\frac{t^2}{2}$ since at $t=0$, $\bar{x}$ & $\dot{\bar{x}} = 0$

$$\ddot{x} = \left(\frac{F - R_H}{m}\right)\frac{t}{2}$$ since at $t=0$, $\dot{x} \neq \dot{x} = 0$

$$F - m\ddot{x} = R_H$$

and also $\theta = 0$

$$F - m(\ddot{x} + D\ddot{\theta}) = R_H$$

$$\Sigma M = 0$$

$$R_{H\,max} = F - mD\left(\frac{FD - mgB}{\frac{2}{5}mD^2}\right)$$

$$f = \frac{R_H}{N} = \frac{F}{mg} - \frac{\frac{2}{5}D}{B}\left(\frac{F}{mg} - \frac{D}{B}\right)$$

$\Sigma M = 0$ about toe A

$$(P_1 - m\ddot{\bar{x}})D - mgB = 0 \quad (\theta \& \ddot{\theta} \text{ are zero})$$

from which $\bar{x} = \left(\frac{P_1}{m} - g\frac{B}{D}\right)\frac{t^2}{2}$ since at $t = 0$, $\bar{x} = 0$, $\ddot{\bar{x}} = 0$

Equating and solving for R_1

$$\frac{P_1 - R_H}{m} = \frac{P_1}{m} - g\frac{B}{D}$$

$$R_H = mg\,B/D$$

But $R_H = mgf_2$

$$\therefore f_2 = B/D \qquad (3\text{-}2)$$

The value of f_2 is seen to be independent of the load parameters and dependent only upon the geometric proportions of the structure. It is to be remembered, however, that the above values of f_1 and f_2 are obtained by assuming that the equivalent force P_1 acts at the c.m.

The expressions for f_1 and f_2 are both straight lines for any given value of B/D. The f_1 line is the boundary of a zone of overturning only. The f_2 line is a boundary of a zone of sliding only. As shown in Fig. C-1 the two lines intersect when they are plotted against values of load. This forms four zones: (1) Overturning Only; (2) Sliding Only; (3) Overturning and Sliding; (4) No Sliding and No Overturning. The three zones involving external movement will now be considered.

3.1.1.1 Zone 1 Overturning, No Sliding

If there is no sliding of the structure and consequently no movement of the front toe A, the only possible motion is overturning about

$\Sigma M = 0$ about the A

$(B - m\ddot{x})D - mgB = 0 \quad (B \neq B \text{ are } \frac{1}{2}\text{CM})$

from which $\ddot{x} = (\frac{B}{m} - g\frac{B}{D})\frac{s}{2}$ since at $t=0$,

$\dot{x}=0$

$\ddot{x}=0$

$$\frac{B - R_N}{m} = \frac{B}{m} - g\frac{B}{D}$$

$$R_N = mg\frac{B}{D}$$

But $R_N = mgt_x$

$$\therefore t_x = \frac{B}{D}$$

tor A. $\bar{x}$ and $\bar{y}$ are zero therefore. Referring to Fig. 3-2 and writing the equations of motion for the sum of the moments about the c.m.:

$$(P_1 - m\ddot{x})(D+B\theta) = (mg - m\ddot{y})(B-D\theta) + \rho^2 m\ddot{\theta} \qquad (3\text{-}3)$$
$$\text{for } 0 \le t \le t_p$$

$$(-m\ddot{x})(D+B\theta) = (mg - m\ddot{y})(B-D\theta) + \rho^2 m\ddot{\theta} \qquad (3\text{-}4)$$
$$\text{for } t_p < t$$

The equations above again use the small angle approximations $\theta \cong \sin\theta$ and $1 \cong \cos\theta$. This would introduce an error if θ become large. For a structure with B/D = $\frac{1}{2}$ the maximum angle θ_{max} will be about 26.5° (the point of instability for overturning). For this angle, θ differs from $\sin\theta$ by about 4$\frac{1}{2}$ percent and 1 differs from $\cos\theta$ by about 12 percent. These errors are within the accuracy limits of the other parameters. For structures with B/D less than $\frac{1}{2}$ the max θ to be dealt with is less than 26° so the errors will be less.

For structures with a large B/D overturning is not generally the important consideration.

Returning to equations (3-3) and (3-4) and recalling that $\bar{x}$ and $\bar{y}$ remain zero in this case, we can write:

$$x = D\theta$$
$$y = -B\theta \qquad \text{for small values of } \theta$$
$$\theta = \theta$$

Substituting into equation (3-3)

$$(P_1 - mD\ddot{\theta})(D + B\theta) = (mg + mB\ddot{\theta})(B - D\theta) + \rho^2 m\ddot{\theta}$$

$$(B' - w^2 T\ddot{\theta}\chi(\Gamma + E\theta) = (w^2\delta + w^2 E\theta\chi(B - T\theta) + \delta_{\mu w}\ddot{\theta}$$

$$\theta = \theta$$
$$\dot{\Im} = -E\dot{\theta}$$
$$\chi = D\theta$$

$$(-w^2\ddot{\chi}(D + B\theta) = (w^2 - w^2\ddot{\Im})(E - T\theta) + \delta_{\mu w}\ddot{\theta} \qquad \text{for } t^b < t$$

$$(B' - w^2\ddot{\chi}(\Gamma + E\theta) = (w^2\delta - w^2\ddot{\Im})(E - E\theta) + \delta_{\mu w}\ddot{\theta} \qquad \text{for } 0 = t \leq t^b$$

or

$$P_1 D + B P_1 \theta - m D^2 \ddot{\theta} = mgB - mgD\theta + mB^2\ddot{\theta} + \rho^2 m \ddot{\theta}$$

and

$$(\rho^2 + B^2 + D^2)m\ddot{\theta} - (mgD + P_1 B)\theta = P_1 D - mgB \qquad (3\text{-}3.1)$$

Since $(B^2 + D^2)$ is the squared distance from the c. m. to the toe about which rotation is taking place, $(\rho^2 + B^2 + D^2)$ is equivalent to the squared radius of gyration of the mass about the toe (designated by $\bar{\rho}^2$). Equation (3-3.1) can then be written:

$$\bar{\rho}^2 m\ddot{\theta} - (mgD + P_1 B)\theta = P_1 D - mgB \qquad (3\text{-}3.2)$$

or

$$\ddot{\theta} - \left(\frac{mgD + P_1 B}{\bar{\rho}^2 m}\right)\theta = \frac{P_1 D - mgB}{\bar{\rho}^2 m}$$

and in a similar manner, equation (3-4) will become:

$$\bar{\rho}^2 m\ddot{\theta} - (mgD)\theta = -mgB$$

or

$$\ddot{\theta} - \left(\frac{gD}{\bar{\rho}^2}\right)\theta = -\frac{gB}{\bar{\rho}^2} \qquad (3\text{-}4.1)$$

These same equations, of course, could have been obtained from Fig. 3-2.

If the structure is originally at rest and has no initial inclination θ (i.e. $\theta_o = 0$, $\dot{\theta}_o = \frac{d\theta}{dt}_{t=0} = 0$). The solution to (3-3.1) is:

$$\theta = \frac{(B/D - P_1/mg)}{(1 + P_1/mg\ B/D)}\left(1 - \cosh\sqrt{\frac{mgD + P_1 B}{\bar{\rho}^2 m}}\, t\right)$$

and the angular displacement and angular velocity at time t_p (end of pulse) are:

$$\theta_p = \frac{(B/D - P_1/mg)}{(1 + P_1/mg\ B/D)}\left(1 - \cosh\sqrt{\frac{mgD + P_1 B}{\bar{\rho}^2 m}}\, t_p\right)$$

$$\theta^{+} = \frac{(1+\mu_1\omega^2 E_1^2)}{(B_1^2 - \mu_1\omega^2 \tau^2)}\left(1-\cos pt\sqrt{\frac{\xi-\mu}{\omega^2 D+\mu E}}\right) + b$$

$$b = \frac{(1+\mu_1\omega^2 E_1^2)}{(B_1^2 - \mu_1\omega^2\tau^2)}\left(1-\cos\omega t\sqrt{\frac{\xi-\mu}{\omega^2 D+\mu E}}\right) f$$

$$\theta^{\cdot}_{t=c} = \frac{\partial\theta}{\partial t} = 0 \qquad \theta = 0$$

$$\ddot{\theta} - \left(\frac{\xi+\mu}{\partial D}\right)\theta = -\frac{\xi}{\partial E}$$

$$\xi_2 \mu\ddot{\theta} - (\omega^2 D)\theta = -\omega^2 E$$

$$\ddot{\theta} - \left(\frac{\xi+\mu}{\omega^2 D+\mu E}\right)\theta = \frac{2+\mu}{E D - \omega^2 E}$$

$$\xi_2 \mu\ddot{\theta} - (\omega^2 D+\mu E)\theta = E D - \omega^2 E$$

$$(\xi_2 + E_2 + D_2)\mu\ddot{\theta} - (\omega^2 D+\mu E)\theta = b D - \omega^2 E \qquad (\text{Ch}+1)$$

$$b D + E E \theta - \omega D_2\ddot{\theta} = \omega^2 E - \omega^2 D E + \omega E^2\ddot{\theta} + \xi_2\mu\ddot{\theta}$$

$$\dot{\theta}_p = \left(\frac{P_1 D - mgB}{mgD + P_1 B}\right)\sqrt{\frac{mgD + P_1 B}{\bar{\rho}^2 m}} \sinh \sqrt{\frac{mgD + P_1 B}{\bar{\rho}^2 m}}\, t_p$$

The solution to (3-4.1) is:

$$\theta_a = A \cosh \sqrt{\frac{gD}{\bar{\rho}^2}}\, t_a + B \sinh \sqrt{\frac{gD}{\bar{\rho}^2}}\, t_a + {}^{B}/_{D}$$

where θ_a is measured from position θ_p, and t_o is measured from the time the pulse stops.

$$A = \theta_p - {}^{B}/_{D}$$

$$B = {}^{\dot{\theta}_p}/\left(\frac{gD}{\bar{\rho}^2}\right)$$

The position of the structure when it stops overturning, providing it doesn't reach the point of overturning instability, can be found by finding the time after the pulse stops for $\dot{\theta}_a$ to equal zero, and adding the time of the pulse. Then the corresponding angular displacement θ_{max} can be found.

This has been done for a number of different values of pulse force and duration, and a family of curves was obtained showing the maximum θ which the structure would assume before rocking back. For any structure there is one value of θ_{max} which will be critical for instability, and the structure would then continue to overturn under its own weight. These results are shown graphically in Fig. C-2 of appendix C.

3.1.1.2 Zone 2 Sliding Only and No Overturning

From Fig. 3-2 the equation of motion is:

$$P_1 = m\ddot{x} + mgf$$

$$\text{or} \quad \ddot{x} = \frac{P_1 - mgf}{m}$$

$$\dot{\theta}_p = \left(\frac{(F_D - m_p g)}{\sqrt{m_p D + F_B B}}\right)\sqrt{\frac{k_x}{m}}\,\sinh\left[\sqrt{\frac{k_x}{m}}\,t_3 + \frac{\sqrt{m_p D + F_B B}}{k_x}\right]$$

$$\theta_p = A\cosh\left[\sqrt{\frac{k_x}{B_D}}\,t_3 + B\sinh\left[\sqrt{\frac{k_x}{B_D}}\,t_3 + \frac{F_D}{k_x}\right]\right.$$

$$A = \theta_p - \frac{F_D}{k_x}$$

$$B = \frac{\dot{\theta}_p}{\sqrt{\frac{k_x}{B_D}}}$$

Since $\theta = 0$ at all values of t

$$x = \bar{x}$$

and

$$\ddot{\bar{x}} = \frac{P_1 - mgf}{m}$$

If the initial displacement and velocity in the x direction are 0

$$\bar{x} = \left(\frac{P_1 - mgf}{m}\right) t^2/2$$

and the velocity at any time

$$\dot{\bar{x}} = \left(\frac{P_1 - mgf}{m}\right) t$$

at the end of the pulse (at end of t_p)

$$\bar{x}_p = \left(\frac{P_1 - mgf}{m}\right) \frac{t_p^2}{2}$$

$$\dot{\bar{x}}_p = \left(\frac{P_1 - mgf}{m}\right) t_p$$

The kinetic energy is:

$$K.E. = \frac{1}{2} m \dot{\bar{x}}^2 = \frac{m}{2} \left(\frac{P_1 - mgf}{m}\right)^2 t_p^2$$

Since the structure is assumed to be rigid and to undergo no internal deformation, this kinetic energy will be dissipated in bringing the structure to rest against the horizontal resistance, mgf. The distance the structure will slide after the pulse has stopped is then obtained from the energy equation:

K.E. of structure at t_p = External work after t_p

$$\frac{m}{2} \left(\frac{P_1 - mgf}{m}\right)^2 t_p^2 = (\bar{x}_a)(mgf)$$

where $\bar{x}_a$ is the distance the structure will slide after the pulse stops.

Solving for $\bar{x}_a$

$$\bar{x}_a = \frac{1}{gf}\left(\frac{P_1 - mgf}{m}\right)^2 \frac{t_p^2}{2}$$

The maximum or total distance the structure will slide is the sum of $\bar{x}_p$ and $\bar{x}_a$.

$$\begin{aligned}\bar{x}_{max} &= \bar{x}_p + \bar{x}_a \\ &= \left(\frac{P_1 - mgf}{m}\right)\frac{t_p^2}{2} + \frac{1}{gf}\left(\frac{P_1 - mgf}{m}\right)^2 \frac{t_p^2}{2} \\ &= \left(\frac{P_1 - mgf}{m}\right)\left(\frac{t_p^2}{2}\right)\left(\frac{P_1}{mgf}\right)\end{aligned}$$

or in dimensionless form

$$\frac{\bar{x}_{max}}{D} = \left(\frac{P_1}{mg} - f\right)\left(\frac{t_p^2 g}{D}\right)\left(\frac{P_1}{mg}\right)\left(\frac{1}{2f}\right) \qquad (3\text{-}5)$$

It is seen that the maximum distance the structure will slide is a function of the magnitude and duration of the load and of the coefficient of resistance.

3.1.1.3 Zone 3 Overturning and Sliding

If $f_2 < f < f_1$ there is too much horizontal sliding resistance for sliding only but not enough for overturning only. The resulting action will be a combination of sliding and overturning.

Referring to Fig. 3-3 and writing equations of motion:

$$\bar{x}_p = \frac{1}{2}\left(\frac{F}{m} - g\right)t^2 + v_0 t + x_0$$

The solutions are found by substituting the expressions for $\bar{x}_p$ and $\bar{x}_c$:

$$\bar{x}_{max} = \bar{x}_p + \bar{x}_c$$

$$= \left(\frac{F}{m} - g\right)\frac{t^2}{2} + \frac{1}{2}\left(\frac{F}{m} - g\right)t^2$$

$$= \left(\frac{F}{m} - g\right)t^2$$

$$\frac{\bar{x}_{max}}{D} = \left(\frac{F}{mg} - 1\right)\left(\frac{t}{\sqrt{\frac{2D}{g}}}\right)^2 \qquad (D=1)$$

$$\Sigma H = 0$$

$$P_1 - m\ddot{\bar{x}} - mD\ddot{\theta} = R_H$$

$$\Sigma M = 0 \quad \text{about toe A}$$

$$(R_H + mD\ddot{\theta})(D + B\theta) - mg(B - D\theta) - \bar{\rho}^2 m\ddot{\theta} = 0$$

Solution of the above two simultaneous equations will give values of θ and $\bar{x}$ for any time t. The maximum values of θ and $\bar{x}$ would be found by first finding the $\bar{x}$, $\dot{\bar{x}}$, θ, and $\dot{\theta}$ at t_p (end of pulse); then rewriting the equations above leaving out the term f_1. Solution of these equations would give $\bar{x}$, $\dot{\bar{x}}$, θ, and $\dot{\theta}$ for any time t_s (after pulse). The time for a maximum θ or $\bar{x}$ would be found by setting the expression for $\dot{\theta}$ or $\dot{\bar{x}} = 0$. The maximum θ & x could then be found. The solution for θ is complicated by the fact that one term will contain the product $(m\ddot{\theta})$.

Solution could be obtained by Neumark's β Method; assuming values of $\ddot{\theta}$ & $\ddot{\bar{x}}$ for the end of time increments, solving for θ & $\bar{x}$, and substituting the values in the equations above. If the equations are satisfied, the values are correct for that time.

However, if the product $(m\ddot{\theta})$ in the equation above is considered to be very small compared to the other terms containing $m\ddot{\theta}$ and is neglected, the equations become:

$$P_1 - m\ddot{\bar{x}} - mD\ddot{\theta} = R_H$$

or

$$P_1 - m\ddot{x} = R_H \quad \text{since} \quad x = \bar{x} + D\theta$$

and

$$\bar{\rho}^2 m\ddot{\theta} - (mgD + R_H B)\theta = R_H D - mgB$$

$$\Sigma H = 0$$

$$F - m\ddot{x} - mD\ddot{\theta} = K^H$$

$$\Sigma M = 0 \quad \text{about point A}$$

$$(K^H + mD\ddot{\theta})(D + E\theta) - \omega^2(B - D\theta) - \frac{1}{2}m\ddot{\theta} = 0$$

The second equation is similar in form to Equat. (3.1.2), which was for overturning only, with the exception that P_1 has been replaced by P_H. The solution will then be the same as that found for Equat. (3.1.2) with P_H substituted for P_1, since P_H is a constant. The maximum θ can be found as was done for overturning only - or from a graph such as Fig. C-2, which was made for $H/D = 1$. In using the graph the value P_H should be substituted for P_1 in the value of the ordinate.

The value of x can be obtained from the equation:

$$P_1 - m\ddot{x} = R_H \quad \text{with } x \text{ \& } \dot{x} = 0 \text{ at } t = 0$$

for any value of $t < t_p$ or from:

$$-m\ddot{x} = R_H \quad \text{with } x = x_p \text{ and } \dot{x} = \dot{x}_p \text{ at } t = t_p$$

for any value of $t > t_p$ The value of $\bar{x}$ can be obtained from the relation:

$$\bar{x} = x - D\theta$$

The preceding comments apply when the equivalent force P_1 is applied at the c.m. of the structure.

3.1.2 Effect of Moving Point of Application of the Load

In the preceding analysis P_1 was assumed to act at the c.m. of the structure. This is a reasonable assumption if the center of mass lies behind the centroid of the surface exposed to the blast. In the building structure considered here, this would mean the center of mass coincided with the geometric center of the structure.

$$\bar{X} = X - DH$$

$$-m\ddot{X} = K_H \qquad \text{with } X = X_b \text{ and } \dot{X} = \dot{X}_b \text{ at } t = t_b$$

$$P - m\ddot{X} = K_H \qquad \text{with } X \neq X = 0 \text{ at } t = 0$$

However, it is probable that the mass distribution could be such that the above conditions were not obtained and the line of action of P_1 would not pass through the c.m. It is of interest then to study the effect of moving the point of application of P_1 with respect to the c.m.

The effect of an impact at the c.m. was to cause a horizontal reaction by the soil on the foundation in the direction opposed to that of the impact. As the position of application of the impact moves upward on the structure it is theoretically possible to reach a point which results in zero horizontal foundation reaction. This point is the center of percussion of the structure. If the point of application were moved further in the same direction beyond the center of percussion the horizontal reaction of soil on the foundation would be the same direction as that of the impact.

First, the location of the center of percussion will be found. In Fig. 7-4 (a) the forces acting as the structure just starts to rotate are shown—P_1 acts at the c.p., which is a distance d above the c.m. The horizontal force R_H must then be zero, from the definition of c.p., and there will be no sliding of the toe. The force equations are:

$$\Sigma H = 0$$

$$P_1 = m\ddot{x}$$

But since $\bar{x} = 0$, $x = D\theta$

$$P_1 = mD\ddot{\theta}$$

$\Sigma M = 0$ about the c.m.

$$(P_1 d) - \rho^2 m\ddot{\theta} = 0$$

$$\Sigma H = 0$$

$$R = m\ddot{x}$$

But since $\ddot{x} = 0$, $x = D\theta$

$$R = mD\ddot{\theta}$$

$\Sigma M = 0$ about the c.m.

$$(R, a) - P_z m\ddot{\theta} = 0$$

Substituting $P_1 = mD\ddot{\theta}$ in the above equation

$$mD\ddot{\theta}d - \rho^2 m\ddot{\theta} = 0$$

$$Dd = \rho^2$$

$$d = \rho^2/D$$

For a rectangular prism of constant mass density with height 2D and base 2B, the squared radius of gyration about an axis through its c.m. is:

$$\rho^2 = \frac{(2B)^2 + (2D)^2}{12} = \frac{1}{3}(B^2 + D^2)$$

and

$$d = \frac{\rho^2}{D} = \frac{1}{3}\left(\frac{B^2 + D^2}{D}\right) \qquad (3\text{-}6)$$

If the structure were rod-like in shape so that the dimension B were negligible compared to D, the expression for d becomes:

$$d = \frac{1}{3}D$$

This is the third point from the top, and is the case generally shown in physics textbooks for the center of percussion.

Equation (3-6) establishes a point of application for P_1 which requires no horizontal resistance force between ground and structure to prevent sliding. When the equivalent impulse load P_1 is applied at this point, the structure will tend only to overturn. The approximate maximum angle of overturning, θ_{max}, can be found by equating the angular impulse about the toe to the initial angular momentum of the structure about the toe. From the angular momentum the initial kinetic energy of rotation can

$$\ddot{\theta} = \frac{3}{4} D$$

$$\frac{D}{2} = \frac{3}{4}\left(\frac{D}{E_s + E_s}\right)$$

$$\delta_s = \frac{(2E)^2 + (ED)^2}{16} = \frac{3}{4}(E_s + E_s)$$

$$D\ddot{\theta} - \frac{4}{3} w\theta = 0$$

$$D\theta = \delta_s$$

$$\delta_s = \theta D$$

be found. From the K. E. the maximum angular displacement, θ_{max}, can be found.

Angular Impulse of Load = $P_i t_p (d+D)$

Initial Angular Momentum of Structure = $I_{m_{toe}} \dot{\theta} = m \bar{\rho}^2 \dot{\theta}$

Kinetic Energy of Rotation = $\frac{1}{2} I_{m_{toe}} (\dot{\theta})^2 = \frac{1}{2} m \bar{\rho}^2 (\dot{\theta})^2$

Moment = $mg(B - D\theta)$

Work = $\int_0^{\theta_{max}} M \, d\theta = \int_0^{\theta_{max}} mg(B - D\theta) \, d\theta = mg\left(B\theta_{max} - \frac{D}{2}\theta_{max}^2\right)$

Equating angular impulse and angular momentum

$$P_i t_p (d+D) = m \bar{\rho}^2 \dot{\theta}$$

$$\dot{\theta} = \frac{P_i t_p (d+D)}{m \bar{\rho}^2}$$

Initial K. E.

$$K.E. = \left(\frac{m}{2}\right)\left(\frac{P_i t_p}{m}\right)^2 \frac{(d+D)^2}{\bar{\rho}^2} = \frac{(P_i t_p)^2}{2m} \frac{(d+D)^2}{\bar{\rho}^2}$$

Equating the initial K. E. to the work done on the structure

$$\frac{(P_i t_p)^2}{2m} \frac{(d+D)^2}{\bar{\rho}^2} = mg\left(B\theta_{max} - \frac{D}{2}\theta_{max}^2\right)$$

$$\theta_{max}^2 - 2\,{}^{B}/_{D}\,\theta_{max} + \left[\left(\frac{P_i}{mg}\right)(d+D)\right]^2 \frac{t_p^2}{\bar{\rho}^2} \frac{g}{D} = 0$$

For which:

$$\theta_{max} = {}^{B}/_{D} \pm \sqrt{\left({}^{B}/_{D}\right)^2 - \left({}^{P_i}/_{mg}\right)^2 \frac{(d+D)^2}{D}\left(\frac{t_p^2 g}{\bar{\rho}^2}\right)}$$

Since at $\theta_{max} = B/D$ the c.m. of the structure has reached a position vertically over the front toe, any rotation beyond that position would result in unstability and overturning. The choice of the + sign in the equation above then would give a meaningless answer since θ_{max} would

$$\theta_{max} = \beta_p \pm \sqrt{\left(\frac{\beta_p}{2}\right)^2 - \left(\frac{\omega_n}{\omega_p}\right)^2 \frac{(1+D)}{(1+\beta_p D)}}$$

$$\theta_{max}^2 - 2\frac{\beta_p}{2}\theta_{max} + \left[\left(\frac{\omega_n}{\omega_p}\right)^2 (1+D)\right] = \frac{\beta_p}{2}\frac{D}{2} = 0$$

$$\frac{\omega_n^2}{(1+\beta_p)(1+D)} = \omega_n^2 \left(E\theta_{max} - \frac{E}{D}\theta_{max}^2\right)$$

$$K.E = \left(\frac{\omega_n^2}{\omega_p^2}\right)\frac{\beta_p}{(1+\beta_p)(1+D)} = \frac{\omega_n^2}{(1+\beta_p)(1+D)}\frac{\beta_p}{2}$$

$$\dot{\theta} = \frac{\omega_n \beta_p}{(1+\beta_p)(1+D)}$$

$$(1+\beta_p)(1+D) = \omega_n \beta_p \dot{\theta}$$

$$\int_0^{\theta_{max}} M\, d\theta = \int_0^{\theta_{max}} \omega_n^2 (E-D\theta)\, d\theta = \omega_n^2 \left(E\theta_{max} - \frac{E}{D}\theta_{max}^2\right)$$

$$\omega_n^2 (E-D\theta)$$

$$\frac{1}{2} I_{toe} (\dot{\theta})^2 = \frac{1}{2} \omega_n^2 \beta_p^2 (\dot{\theta})^2$$

$$I_{toe} \dot{\theta} = \omega_n \beta_p \dot{\theta}$$

$$(1+\beta_p)(1+D)$$

be greater than B/D. The equation to be used is then:

$$\theta_{max} = B/D - \sqrt{(B/D)^2 - (P_1/mg)^2 \frac{(d+D)^2}{D}\left(\frac{t_p^2 g}{\rho^2}\right)} \qquad (3\text{-}7)$$

where $d = \frac{1}{3}\left(\frac{B^2 + D^2}{D}\right)$ for the center of percussion.

In obtaining the above equations, moments were taken about the toe of the structure. If the horizontal reactive force, which acts through the toe, were not zero (i.e. P_1 not applied at the center of percussion), and if the horizontal resistive force were large enough to prevent any sliding of the structure, the resulting equations would have the same appearance with one exception—the distance d would be the distance to the point of application of P_1 measured vertically upward from c.m instead of the distance to the c.p. Equation (3-7) can then be written in general as:

$$\theta_{max} = B/D - \sqrt{(B/D)^2 - (P_1/mg)^2 \frac{(d'+D)^2}{D}\frac{t_p^2 g}{\rho^2}} \qquad (3\text{-}8)$$

where d' is the distance from c.m. to point of application of P_1. When $d' = d = \frac{1}{3}\left(\frac{B^2+D^2}{D}\right)$ then P_1 is applied at the center of percussion. The generalization of equation (3-8) requires that the structure does not slide for any position of P_1.

Some qualitative information can be obtained from examining equation (3-8). The term d' appears in the minus term under the radical. If d' is zero, then the force P_1 is applied at the c.m. As d' increases in

$$q_1 = q = \frac{2}{1}\left(\frac{D}{B_s + D_s}\right)$$

$$\theta^{max} = B^{D} - \left(B^{D}_{s} - (B^{min})_{s}\frac{D}{(q_1 + D)_s}\frac{\delta_s}{2}\right)$$

$$q = \frac{2}{1}\left(\frac{D}{B_s + D_s}\right)$$

$$\theta^{max} = B^{D} - \left((B^{D})_{s} - (B^{min})_{s}\frac{D}{(q + D)_s}\left(\frac{\delta_s}{2}\right)\right)$$

size from zero (measured upward from c.m.), the total quantity under the radical will get smaller. This will make the value of θ_{max} get larger. In other words, the same impulsive force applied at successively higher positions above the c.m. will produce larger rotational displacements of the structure.

If the frictional horizontal resistive force is not great enough to prevent sliding, it is not so simple to predict the maximum rotational displacement by the energy method previously used. Part of the initial kinetic energy imparted to the structure is used up in overcoming sliding resistance, and part is used up in overcoming rotational resistance. It is true, however, that when the point of application of P_1 is at the center of percussion, all the energy goes into rotating the structure. If the point of application is moved away from the c.p. in the downward direction (toward the c.m.) some of the energy goes into sliding the structure in the same direction as P_1, and less energy goes into overturning. If the point of application is moved upward from the center of percussion, some of the energy goes into sliding also. But in this case the sliding is in the direction (opposite to P_1) which increases the rotational displacement. The structure is then more susceptible to overturning.

In appendix C., Figs. C-4 and C-5 show some of the relationships discussed above.

3.2. Analysis of Flexible Rectangular Structure on Soil Unyielding in Vertical Direction. Load Applied at Center of Mass

In the analysis so far, the structure studied was assumed to be rigid and unyielding. It was assumed incapable of using up any energy internally.

It is now desirable to examine a structure which can yield internally, and to make some comparisons. The structure is shown in Fig. 3-5a. The mass of the structure is considered concentrated as shown at a height D. The top and bottom horizontal girders are assumed infinitely stiff. The vertical columns are assumed to have flexibility. This allows the structure to deflect, as shown in Fig. 3-5b, with the top and bottom girders remaining parallel (so called "shear beam" deflection). The stiffness (k) of the structure is the horizontal displacement (Δ) of the top girder relative to the lower girder per unit force acting on the c.m.; k is assumed to be linear. It is a composite stiffness including the action of both columns. The whole structure is still free to slide or overturn, as was the previous rigid structure, depending on the balance of forces.

The structure is again assumed to be resting on hard ground, unyielding in the vertical direction. The horizontal resistive force of the ground on the structure is again mgf, where mg is the weight of the structure and f is the coefficient of resistance between the soil and structure.

The equivalent concentrated blast loading, P_1, is assumed to act through the center of mass of the structure. As the impulsive load strikes the structure on a horizontal line through the center of mass, it is "filtered" by the inertia of the mass. The net or filtered force is $P_1 - m\ddot{x}$, where $m\ddot{x}$ is the force with which the mass resists acceleration. This

"filtered" force will then produce deflection within the structure by passing into the columns. The columns deflect elastically or plastically in a horizontal direction until their deflection (Δ) times their stiffness (k) is large enough to balance the "filtered" force $P_1 - m\ddot{x}$. This force is then transferred horizontally from the base of the structure into the ground. Needless to say, the force transferred to the ground in this manner cannot exceed the horizontal resistance (mgf).

The flow of forces described above may not be able to balance the load of P_1, especially since the deflection on the structure is limited by the horizontal resistance (mgf) of the ground on the structure. If this is the case, the whole structure will tend to slide. This causes additional movement of the mass, and consequently additional inertia force to create the needed balance with P_1.

The other extreme case would be that of the horizontal resistance (mgf) being adequate to prevent sliding but with the structure itself resisting further deformation so that the load P_1 is not balanced. In this case there would be a tendency for the structure to rotate bodily, thus producing rotary inertia resistance to help balance P_1.

Thus, under different conditions the flexible structure can respond in several ways: (1) It can absorb the whole impulse internally with no sliding and no overturning. (2) It can absorb the impulse by internal distortion plus sliding. (3) It can absorb the impulse by internal distortion and overturning. The maximum displacements for the different motions need not occur in phase.

In general the effect of flexibility on the structure is to reduce the burden placed upon the foundation.

3.2.1 No Sliding and No Overturning

The toe does not move and the angle θ remains zero. The structure does distort and the mass moves horizontally a distance x. It is desired to find the limiting value of f for this action. From Fig. 3-5b:

The shear in the columns is resisted by R_H

$$\therefore \quad KX = R_H$$

Also $\Sigma H = 0$

$$P_1 = m\ddot{x} + KX$$

$\Sigma M = 0$ about toe

$$(P_1 - m\ddot{x})D = mg(B-x)$$

Substituting

$$KXD = mg(B-x)$$

Solving for x

$$X(KD + mg) = mgB$$

$$x = \frac{mgB}{KD+mg}$$

Since $R_H = KX$

$$R_H = K\,\frac{mgB}{KD+mg} = \frac{mg\,B/D}{1 + mg/KD}$$

But $$f = \frac{R_H}{mg} = \frac{B/D}{1 + mg/KD} \qquad (3-7)$$

$$\therefore \quad Kx = F_H$$

$$\Sigma H = 0$$

$$F_1 = m\ddot{x} + Kx$$

$$\Sigma M = 0 \qquad \text{about the}$$

$$(F_1 - m\ddot{x})D = m\omega^2(E-x)$$

$$Kx(D) = m\omega^2(E-x)$$

$$x(KD + m\omega^2) = m\omega^2 E$$

$$x = \frac{m\omega^2 E}{KD + m\omega^2}$$

$$F_m = Kx$$

$$K_m = K\,\frac{KD + m\omega^2}{m\omega^2 E} = \frac{1 + \frac{m\omega^2}{K}D}{\frac{1}{E}D}$$

$$\frac{F_m}{E_H} = \frac{1 + \frac{m\omega^2}{K}D}{\frac{1}{E}D} = 1$$

If k should be infinitely large (i.e. the structure would be rigid) the above expression becomes: F = R/D which is what was obtained previously for a rigid structure, for the limit of sliding with no overturning. The deformation of the structure has replaced the sliding. For values less than F given above, the structure will slide. The equation above is valid for small elastic deflections within the structure.

If the structure enters the plastic range by action in a member or joint, the horizontal force transmitted to the ground will be that corresponding to the plastic resistance of the structure. Whether or not this exceeds the value of horizontal resistance (μgf) will determine whether the structure slides or not.

3.2.2 Approximate Distance Structure Will Slide

When the initial K. E. imparted to the structure is used up in internal deflection and in external sliding, an approximate solution for the distance the structure slides can be obtained by the impulse-momentum relation. As before, the initial K. E. of the mass of the structure can be obtained by assuming the initial momentum equal to the impulse of the load:

Impulse = Momentum

$$P_1 t_p = m\dot{x}$$

or

$$\dot{x} = \frac{P_1 t_p}{m}$$

The initial K. E. is:

$$K.E. = \tfrac{1}{2} m(\dot{x})^2$$

$$= \frac{m}{2}\left(\frac{P_1 t_p}{m}\right)^2$$

$$\dot{x} = \frac{1}{m}\left(-\frac{3}{4}\right)$$

$$K.E. = \frac{1}{2} m (\dot{x})^2$$

The mass will move horizontally until the horizontal force in the columns equals the available horizontal resistance of the ground on the structure mgf. Then the entire structure will slide against the resistance mgf until the balance of the energy is used up. The deflected structure may then recover its original shape, but the base of the structure is assumed to remain at its maximum horizontal displacement. Referring to Fig. 3-6, the work necessary to deflect the columns is:

$$V_c = \frac{1}{2}\left(\frac{(mgf)^2}{K}\right)$$

Referring to Fig. 3-7, the work in sliding the structure is:

$$V_s = f\,mg\,\bar{x}$$

Equating initial K. E. to work done internally and externally:

$$K.E. = V_c + V_s$$

$$\frac{m}{2}\left(\frac{P_i t_e}{m}\right)^2 = \frac{1}{2}\,\frac{(mgf)^2}{K} + f\,mg\,\bar{x}$$

Solving for $\bar{x}$, the distance the structure slides:

$$\bar{x} = \frac{1}{2}\left(\frac{P_i}{mg}\right)^2 \frac{t_e^2 g}{f} - \frac{mgf}{2K}$$

Dividing by D to make dimensionless:

$$\frac{\bar{x}}{D} = \left(\frac{1}{2f}\right)\left(\frac{P_i}{mg}\right)^2\left(\frac{t_p^2 g}{D}\right) - \left(\frac{mg}{KD}\right)\left(\frac{f}{2}\right) \qquad (3\text{-}10)$$

The equation above shows that a non-rigid structure will slide a lesser distance than a rigid one. Furthermore, a given flexible structure on a given foundation will tend to reduce sliding by the same amount for all values of impulsive loads.

$$\frac{D}{\chi} = \left(\frac{\varepsilon + \gamma\,\omega_0^2}{1 + \gamma\,\Gamma_D}\right)\left(\frac{T_e}{\varepsilon_F}\right) - \left(\frac{\kappa T_D}{\omega_0^2}\right)\left(\frac{\gamma\varepsilon}{\tau}\right)$$

3.3 Analysis of Rigid Structure on Soil Yielding Vertically, Load Applied at Center of Mass

Thus far the structures studied have been assumed to be resting on ground which was unyielding vertically. As the structure received the impulse, the vertical thrust on the ground was resisted without any yielding. Since this may not be the case, the effect of yielding of the ground vertically will now be considered.

As shown in preceding analyses, the overturning moment of the structure involves the horizontal resistive force of the ground on the structure. The moment opposing overturning involves partly the vertical ground reaction on the front toe A. Accordingly, another limitation is placed on the stability of the structure; i.e. the ability of the ground to resist a vertical thrust.

The structure is shown in Fig. 2-4. It is supported on two vertical springs, A and C, each having a linear stiffness designated by k_v. k_v is related to the properties of the structure since it is defined as:

$$K_v = \frac{mg}{2S}$$

where mg is the weight of the structure and S is the vertical settlement in each spring caused by the weight mg.

P_1 is assumed to act in a horizontal line through the center of mass of the structure. The structure is assumed to be rigid. It is also assumed that there is sufficient horizontal resistance, mgf, to prevent sliding. These assumptions limit the action of the structure to overturn-

$$K_v = \frac{10\Sigma}{S}$$

ing; and that is the action which is affected primarily by the vertical yielding of the soil.

It is also true that vertical yielding of the soil beneath the structure will tend to change the horizontal sliding resistance. This change will be an increase generally, and will make the previous sliding calculations a little safer. The suitability of the previous overturning calculations, however, may be affected; and to study that possibility is the purpose of this section.

Referring again to Fig. 2-4, the springs are assumed to have linear stiffnesses as shown. In addition, the springs are not able to pull down on the structure, so if the structure tends to lift off a spring, there will be no restraint.

Referring to Fig. 3-8, the action of this idealized structure under an impulse load is as follows. The forward toe (A) will depress spring A and take increasing vertical thrust from the ground. The rear toe will still rest on spring C, but there is a tendency for the rear toe to lift. The center of mass of the structure will be moving downward. Finally, the vertical thrust under toe A will reach a value equal to the algebraic sum of the weight of the structure and the inertia force caused by the vertical movement of the mass. At this point there will be zero force downward through toe C, and toe C will be free to lift. Overturning will then start to take place about toe A, which is in a depressed position.

When overturning starts about toe A, the center of mass will reverse its vertical component of movement and move upward. This causes a

reversal in the vertical inertia force, $m\ddot{y}$, which will tend to depress toe A further. But if toe A depresses, the center of mass will lower too. This tends to counteract the upward movement of the c.m. caused by the overturning.

If the mass of the structure were very large relatively and the spring were relatively soft, the result would be for the mass to rotate without vertical movement of its c.m. Spring A would depress the amount necessary to permit this.

If the mass of the structure were relatively small and the spring were relatively stiff, the result would be for spring A to hold the position it had when toe C lifted, and for the structure to rotate about toe A.

The action described above may stop at any point of its progress, depending upon the prevailing values of the problem parameters.

The action can be thought of as being in two phases: (1) Depression of front toe with rear toe not lifted. (2) Overturning about front toe.

3.3.1 Phase I Depression of Front Toe With Rear Toe Not Lifted

From Fig. 3-8a:

$$\left.\begin{aligned} x &= \theta D \\ y &= \bar{y} - B\theta \\ \bar{y} &= 2B\theta \\ y &= +B\theta \end{aligned}\right\} \quad \text{For small values of } \theta$$

$$\begin{cases} X = \\ \bar{n} = \bar{2} - \\ \bar{2} = \\ \bar{n} = + \end{cases}$$

$\Sigma H = 0$

$$R_H = P_1 - m\ddot{x} = P_1 - mD\ddot{\theta}$$

$\Sigma V = 0$

$$mg = R_{vc} + m\ddot{y} + K_v\bar{y} + \frac{mg}{2}$$

$$R_{vc} = \frac{mg}{2} - mB\ddot{\theta} - 2BK_v\theta$$

$\Sigma M = 0$ about center of mass

$$R_H D + R_{vc} B - K_v \bar{y} B - \frac{mgB}{2} - \rho^2 m\ddot{\theta} = 0$$

substituting for R_H and R_{vc}

$$m\ddot{\theta}(D^2 + B^2 + \rho^2) + 4B^2 K_v \theta = P_1 D$$

but $(D^2 + B^2 + \rho^2) = \bar{\rho}^2$

$$\therefore \ddot{\theta} + \frac{4B^2}{\bar{\rho}^2}\frac{K_v}{m}\theta = \frac{P_1 D}{\bar{\rho}^2 m}$$

from which

$$\theta = \frac{P_1 D}{4B^2 K_v}\left(1 - \cos\sqrt{\frac{4B^2 K_v}{\bar{\rho}^2 m}}\, t\right) \qquad (3\text{-}1)$$

since at $t = 0$, $\theta \& \dot{\theta} = 0$

Bear too will cease to touch spring c when $R_{vc} = 0$, or:

$$mB\ddot{\theta} + 2BK_v\theta = \frac{mg}{2}$$

From which

$$\theta = C_1 \cos\sqrt{\frac{2K_v}{m}}\, t + \frac{mg}{4BK_v} + C_2 \sin\sqrt{\frac{2K_v}{m}}\, t$$

Since

$$\theta \& \dot{\theta} = 0 \quad \text{at} \quad t = 0$$

$$C_1 = -\frac{mg}{4BK_v}$$

$$C_2 = 0$$

$$\Sigma H = 0$$

$$K_H = P - m\ddot{x} = P - mD\ddot{\theta}$$

$$\Sigma V = 0$$

$$m\ddot{\delta} = K_{VC} + m\ddot{\eta} + Nv\ddot{\eta} + \frac{mg}{c}$$

$$K_{VC} = \frac{mg}{2} - mB\ddot{\theta} - 2BK_V\theta$$

$\Sigma M = 0$ about centre of mass

$$K_H D + K_{VC} B - Nv\ddot{\eta} B - \frac{mB^2}{2}\ddot{\theta} - \epsilon_g m\ddot{\theta} = 0$$

substituting for K_H and K_{VC}

$$m\ddot{\theta}(D^2 + B^2 + \epsilon_g^2) + 4B^2 K_V \theta = P_1 D$$

But $(D^2 + B^2 + \epsilon_g^2) = \epsilon_g^2$

$$\therefore \ddot{\theta} + \frac{4B^2}{\epsilon_g^2}\frac{K_V}{m}\theta = \frac{P_1 D}{m\epsilon_g^2}$$

from where

$$\theta = \frac{P_1 D}{4B^2 K_V}\left(1 - \cos\sqrt{\frac{4B^2 K_V}{\epsilon_g^2 m}}\, t\right)$$

since at $t = 0$, $\theta + \dot{\theta} = 0$

$$mB\ddot{\theta} + 2BK_V\theta = \frac{mg}{2}$$

$$\theta = C_1 \cos\sqrt{\frac{2K_V}{m}}\, t + \frac{4BK_V}{mg} + C_2 \sin\sqrt{\frac{2K_V}{m}}\, t$$

$$C_2 = 0$$

$$C_1 = -\frac{mg}{4BK_V}$$

$\theta + \dot{\theta} = 0$ at $t = 0$

And

$$\theta = \frac{mg}{4BK_v}\left(1 - \cos\sqrt{\frac{2K_v}{m}}\,t\right)$$

or since $K_v = \frac{mg}{2S}$

$$\theta = \left(\frac{1}{2}\right)\left(\frac{S}{D}\right)\left(\frac{D}{B}\right)\left(1 - \cos\sqrt{\frac{g}{D}\,\frac{D}{S}}\,t\right) \qquad (3\text{-}11)$$

But from equation (3-11)

$$\theta = \left(\frac{P_1 D}{4B^2 K_v}\right)\left(1 - \cos\sqrt{\left(\frac{4B^2}{\rho^2}\right)\left(\frac{K_v}{m}\right)}\,t\right)$$

or since $K_v = \frac{mg}{2S}$

$$\theta = \left(\frac{P_1}{mg}\right)\left(\frac{D}{B}\right)^2\left(\frac{1}{2}\right)\left(\frac{S}{D}\right)\left(1 - \cos\sqrt{\left(\frac{2B^2}{\rho^2}\right)\left(\frac{g}{D}\right)\left(\frac{D}{S}\right)}\,t\right)$$

Equating the values of θ :

$$\left(\frac{1}{2}\right)\left(\frac{S}{D}\right)\left(\frac{D}{B}\right)\left(1 - \cos\sqrt{\frac{g}{D}\,\frac{D}{S}}\,t\right) = \left(\frac{P_1}{mg}\right)\left(\frac{D}{B}\right)^2\left(\frac{1}{2}\right)\left(\frac{S}{D}\right)\left(1 - \cos\sqrt{\frac{2B^2}{\rho^2}\,\frac{g}{D}\,\frac{D}{S}}\,t\right)$$

And solving for P/mg —

$$\frac{P_1}{mg} = \left(\frac{B}{D}\right)\left(\frac{1 - \cos\sqrt{\left(\frac{D}{S}\right)\left(\frac{g}{D}\right)}\,t}{1 - \cos\sqrt{\left(\frac{2B^2}{\rho^2}\right)\left(\frac{g}{D}\right)\left(\frac{D}{S}\right)}\,t}\right) \qquad (3\text{-}12)$$

Equation (3-12) gives the time which a given pulse, P_1, must act on a rigid structure having a given mg and B/D before the rear toe will lift.

If the pulse acts a shorter time than that of equation (3-12) the rear toe will not lift. The instant the pulse stops the acceleration of the mass vertically downward will become a deceleration and the inertia

force will act downward instead of upward. This downward force plus the weight of the structure will keep the rear toe down.

Equation (3-12) therefore represents the minimum combinations of pulse magnitude and duration which will cause the rear toe to lift.

In Appendix C, Fig. C-6 is a plot of equation (3-12) for D/D = ½ and D/S = 25. The ratio D/D gives the geometric proportions of the structure; the ratio D/S indicates that S, the immediate settlement as the structure is placed upon the ground (springs), is 1/25 of D, the height of the center of mass.

The angle, θ_1, which the structure has assumed as the rear toe lifts, is given by substituting values satisfying equation (3-12) in equation (3-11). The approximate depression of the spring under toe A would be $\bar{y}_1 = 2B\theta_1$. The work done on the spring (ground) would then be:

$$V = \frac{1}{2} K_v \bar{y}_1^2 = \frac{1}{2} K_v (4B^2\theta_1^2) = 2K_v B^2 \theta_1^2 \qquad (3\text{-}13)$$

3.3.2 Phase II. Overturning About Front Toe

As discussed previously, this front spring, A, may deprese more after the rear toe lifts. For example, if the mass were large and the spring soft, this additional depression of the spring A caused by an additional rotation θ_2 would be significant. On the other hand, if the mass were relatively small and the spring relatively stiff, the spring would depress only slightly and the c.m. would rise as the structure rotated. With the spring characteristic shown in Fig. 2-4, the spring A will retain its position of maximum depression.

$$\Lambda = \frac{1}{2} K_r \Sigma_r^2 = \frac{1}{2} K_r (4\pi\theta_r^2) = 2K_r\theta_r^2$$

The determination of θ_{max} is complicated by the fact that variations in the duration of the pulse change the form of the calculations. In addition the rotation θ_2 is taking place about a point (toe A) which is moving vertically. The reversal of inertia forces can cause the rear toe to come back down temporarily on spring C.

To find the value of θ_2 for a given case it is necessary first to determine from equation (3-12) or from a graph such as Fig. C-6 whether the impulse is sufficient to cause lifting of the rear toe. It is then necessary to write the differential equations of motion involving θ and $\dot{\theta}$ and solve for θ, $\dot{\theta}$, and t for the different stages of the action, i.e. lifting of rear toe, ending of pulse, and point where rotation stops.

To perform the above calculations is tedious, and no simple general equations can be written. For a specific problem, a solution can be obtained very nicely by numerical methods such as are discussed in reference 5, p. 50. Solution by numerical methods has the added virtue of giving a step-by-step picture of the motion of the structure. However, the result will not be any better than the assumptions made to start with, and the labor of solution by either analytical or numerical methods may be unwarranted.

3.3.3. Maximum Rotation Compared to Structure on Rigid Ground

In lieu of either of the calculations just described, some qualitative information can be obtained by comparing energy levels. To do this it is necessary again to make the assumption that the initial

momentum of the structure is equal to the impulse of the load. The initial kinetic energy can then be found, and this initial kinetic energy is the total energy of the structure at zero time. No more energy is added to the system. The initial K. E. is used up by doing work on the structure. Since the structure is rigid, all the work done is external work. Since it has been assumed that the horizontal ground resistance is large enough to prevent sliding, the external work consists of rotating the structure.

Fig. 3-9 shows identical rigid structures placed (a) on yielding ground and (b) on unyielding ground. Both structures have reached the same maximum angular displacement $\bar{\theta}_{max}$, but the one in (a) has also depressed the spring under the front toe A a distance of $\bar{y}_1$. The work required to put these structures in these positions will be found.

The work to put structure (a) in the position shown can be thought of in two parts; first, the depressing of the front spring a distance $\bar{y}_1$ as the structure rotates an amount $\bar{\theta}_1$; second, the rotation from $\bar{\theta}_1$ to $\bar{\theta}_{max}$ with $\bar{y}_1$ constant. The expression for work is:

$$Work_a = \frac{1}{2} K_v \bar{y}_1^2 + \int_{\bar{\theta}_1}^{\bar{\theta}_{max}} M \, d\theta$$

M is the moment required to rotate the structure and is a function of θ.

But

$$\bar{y}_1 = 2B\bar{\theta}_1$$

$$K_v = \frac{mg}{2S}$$

$$Work_a = \frac{1}{2}\frac{mg}{2S}(2B\bar{\theta}_1)^2 + \int_{\bar{\theta}_1}^{\bar{\theta}_{max}} M \, d\theta$$

$$= \frac{mg}{S} B^2 \bar{\theta}_1^2 + \int_{\bar{\theta}_1}^{\bar{\theta}_{max}} M \, d\theta$$

$$\text{Work}_1 = \frac{1}{2} k_1 \bar{\theta}_1^2 + \int_{\bar{\theta}_1}^{\bar{\theta}_{max}} M_1 \, d\theta$$

$$\bar{\theta}_1 = C_1 \bar{\theta}_1$$

$$k_1 = \frac{C_2}{L_1 a_2}$$

$$\text{Work}_1 = \frac{1}{2} \frac{C_2}{L_1 a_2} (C_1 \bar{\theta}_1)^2 + \int_{\bar{\theta}_1}^{\bar{\theta}_{max}} M_1 \, d\theta$$

$$= \frac{C_2}{2 L_1 a_2} \bar{\theta}_1^2 + \int_{\bar{\theta}_1}^{\bar{\theta}_{max}} M_1 \, d\theta$$

The work to put structure (b) in the position shown is:

$$\text{Work}_b = \int_0^{\bar{\theta}_{max}} M\,d\theta$$

which could be written

$$\text{Work}_b = \int_0^{\bar{\theta}_1} M\,d\theta + \int_{\bar{\theta}_1}^{\bar{\theta}_{max}} M\,d\theta$$

M is again the moment

$$M = mg(B - D\theta)$$

Substituting this value in the first term—

$$\text{Work}_b = mg\int_0^{\bar{\theta}_1}(B - D\theta)\,d\theta + \int_{\bar{\theta}_1}^{\bar{\theta}_{max}} M\,d\theta$$

$$= mg\left(B\bar{\theta}_1 - \frac{D\bar{\theta}_1^2}{2}\right) + \int_{\bar{\theta}_1}^{\bar{\theta}_{max}} M\,d\theta$$

Now assume that these two quantities of work were equal. That would mean that a given initial K. E. would produce the same $\bar{\theta}_{max}$ in both structures (a) and (b).

$$\text{Work}_a = \text{Work}_b$$

$$\frac{mg}{S}B^2\bar{\theta}_1^2 + \int_{\bar{\theta}_1}^{\bar{\theta}_{max}} M\,d\theta = mg\left(B\bar{\theta}_1 - \frac{D\bar{\theta}_1^2}{2}\right) + \int_{\bar{\theta}_1}^{\bar{\theta}_{max}} M\,d\theta$$

from which

$$\text{crit } \bar{\theta}_1 = \frac{B}{D}\left(\frac{1}{(D/S)(B/D)^2 + 1/2}\right) \qquad (3\text{-}14)$$

If equation (3-14) is satisfied, both structures will have the same $\bar{\theta}_{max}$ for a given impulse. The angle $\bar{\theta}_1$ involves the final compression of the spring and can be somewhat larger than the θ at which the rear toe first lifts.

This angle has been previously designated θ_1.

If, for a given load applied to a given structure on yielding ground, the value of the toe depression $\bar{y}_1$ could be determined, the value of $\bar{\theta}_1$ could be obtained from the relation $\bar{\theta}_1 = \bar{y}_1/B$. This $\bar{\theta}_1$ could be compared with the critical $\bar{\theta}_1$ obtained from equation (3-14). From this comparison the following can be inferred.

If $\bar{\theta}_1 <$ crit $\bar{\theta}_1$, the structure will have a lesser maximum rotation on the yielding ground than on unyielding ground.

If $\bar{\theta}_1 =$ crit $\bar{\theta}_1$, the structure will have the same maximum rotation on either the yielding ground or on unyielding ground.

If $\bar{\theta}_1 >$ crit $\bar{\theta}_1$, the structure will have a greater maximum rotation on the yielding ground than on unyielding ground.

The value of $\bar{\theta}_1$ is not known exactly. It is equal to or greater than θ_1, which is the angle at which the rear toe lifts. The value of θ_1 can be found from equations (3-12) and (3-11).

Since $\bar{\theta}_1 \geq \theta_1$, it follows that when $\theta_1 >$ crit $\bar{\theta}_1$ the structure will rotate farther on yielding ground than on non-yielding ground. If $\theta_1 \leq$ crit $\bar{\theta}_1$ no definite statement can be made.

The value of critical $\bar{\theta}_1$ obtained from equation (3-14) depends on the shape of the structure and the flexibility of the ground.

There is a practical minimum h/b which could be expected if the ground were used to support a structure. As this minimum h/b is approached the value of crit $\bar{e}_1$ from equation (3-14) gets larger until finally $\bar{e}_1 <$ crit $\bar{e}_1$ and the structure rotates less on yielding ground than on rigid ground.

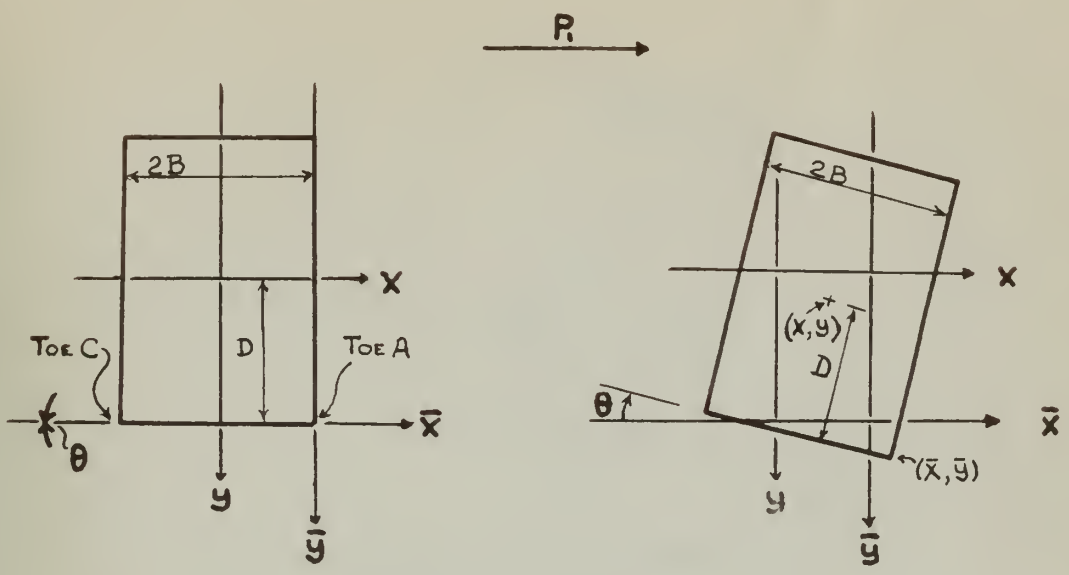

STRUCTURE AT REST

STRUCTURE DISPLACED

FIG 3-1

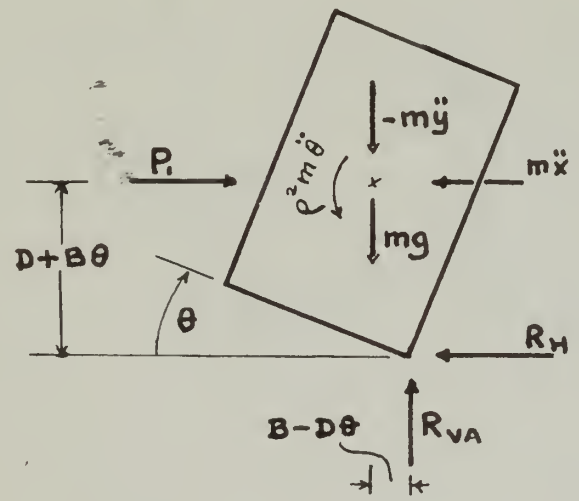

FORCE DIAGRAM
COORDINATES REFERRED TO c.m.

FIG 3-2

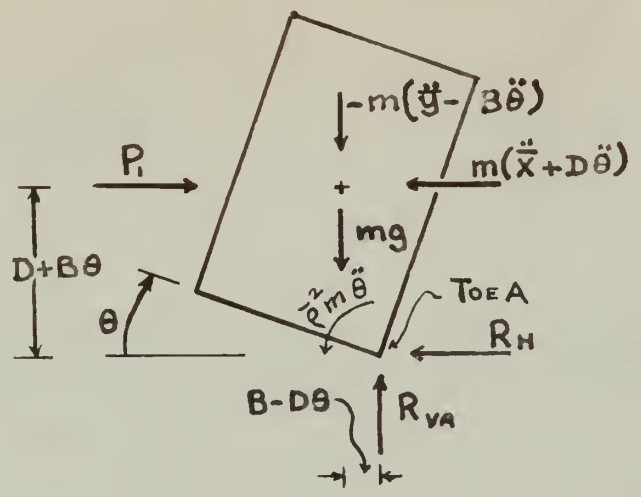

FORCE DIAGRAM
COORDINATES REFERRED TO TOE A

FIG 3-3

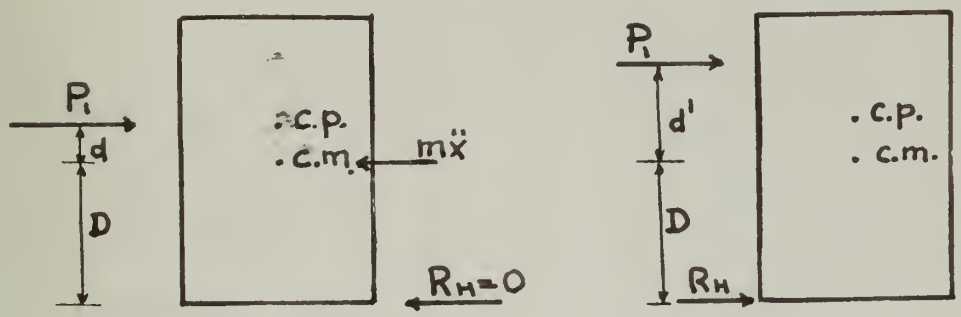

P1 APPLIED AT c.m. P1 NOT APPLIED AT c.m.

FIG 3-4

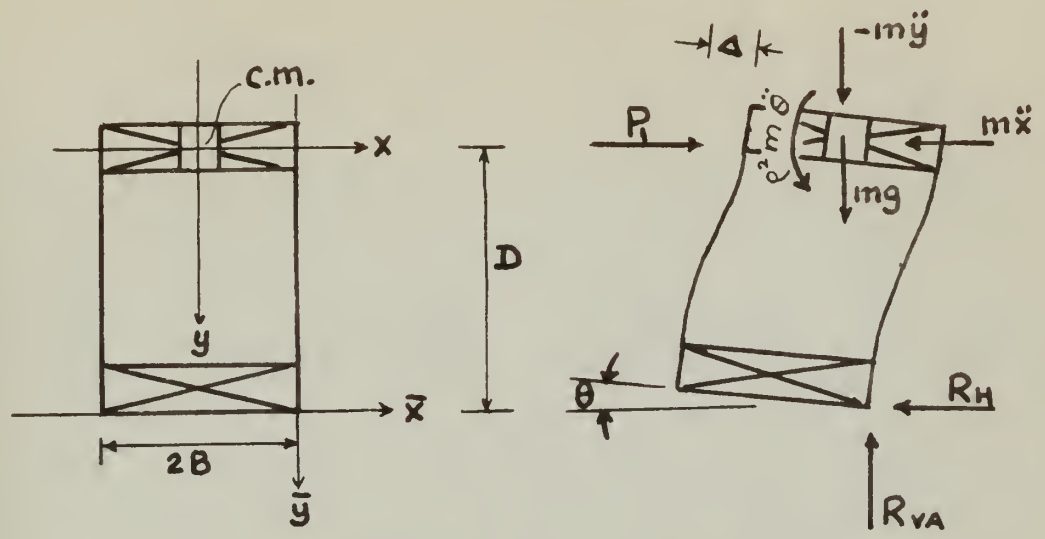

FLEXIBLE STRUCTURE

FIG 3-5

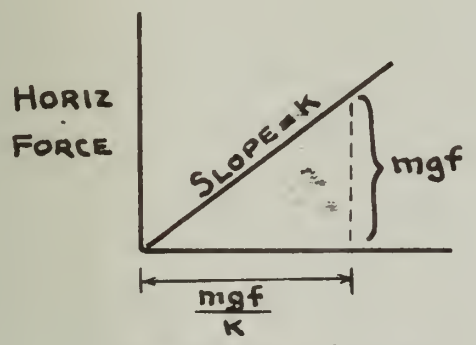

RESISTANCE OF STRUCTURE TO HORIZONTAL DEFORMATION

FIG 3-6

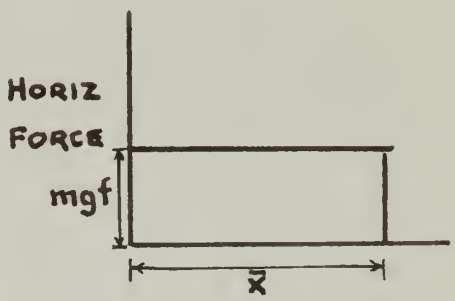

RESISTANCE OF GROUND TO SLIDING OF STRUCTURE A DISTANCE $\bar{x}$

FIG 3-7

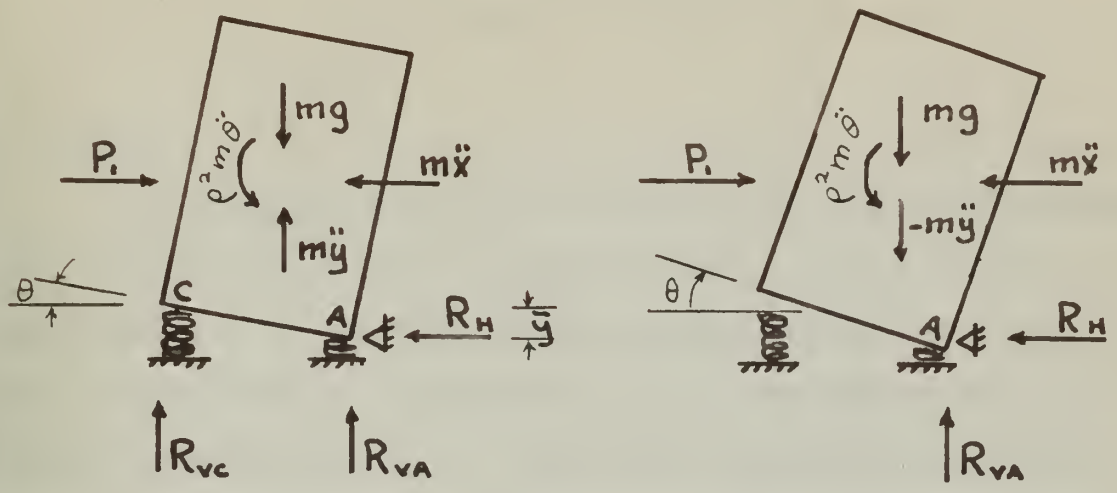

PHASE 1
(a)

PHASE 2
(b)

FIG 3-8

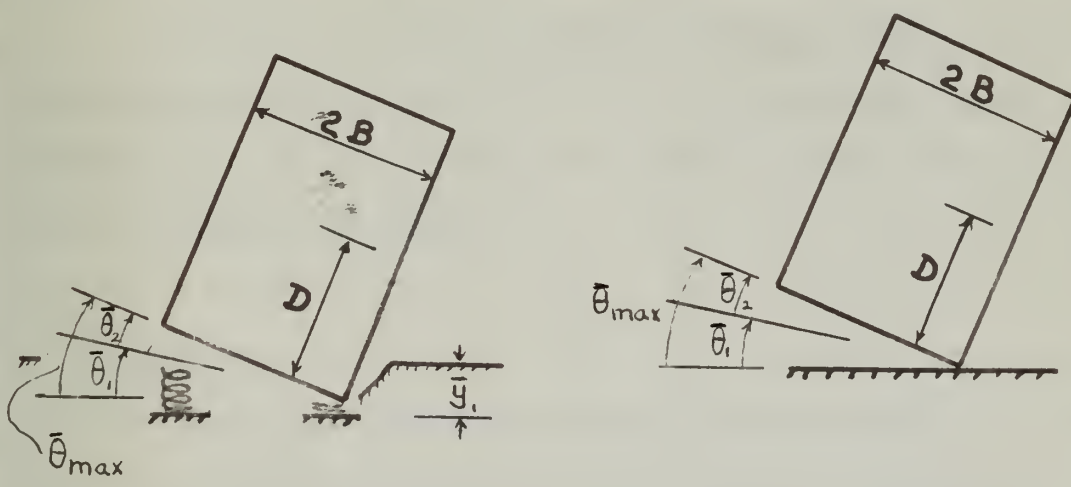

(a)

(b)

FIG 3-9

IV. SUMMARY AND CONCLUSIONS

4.1 Summary

The parameters affecting the behavior of a simple structure subjected to a dynamic loading are classed in three groups: (1) those characteristic of the structure (2) those characteristic of the load (3) those characteristic of the interaction of structure and ground. The structure is a simple rectangular box, first considered rigid and then flexible. The loading is a square impulse function, acting horizontally as one equivalent force, applied at different points on the structure. The ground is considered to have horizontal properties of resistance and vertical properties of resistance. Both rigid and flexible grounds are considered.

Solutions for overturning and sliding are obtained for the basic rigid structure on rigid ground with the equivalent concentrated load applied at the c.g. of the structure. Then the effects of changing the various parameters are studied.

4.2 Conclusions

When a rigid structure on rigid ground is struck by an impulsive load at its center of mass, the structure may slide or tend to overturn. Which motion does occur is influenced by the geometric properties of the structure, by the magnitude of the impulse, and by the nature of the horizontal ground resistance. It is possible to have conditions which will

IV. [illegible]

[illegible]

[illegible]

cause overturning only, sliding only, both sliding and overturning, or no movement of the structure.

The maximum angle of overturning produced in a rigid structure on rigid ground by an impulse acting at the center of mass is less than for a steady load of the same magnitude. The shorter the duration of the load, the less the maximum overturning angle.

The distance a structure will slide when struck by an impulse load increases for longer pulses (within the impulse range) and increases for smaller values of horizontal ground resistance.

Both the maximum angle of overturning and the distance of sliding are influenced by the point on the structure at which the equivalent concentrated impulse load is applied. At the c.g. no horizontal ground resistance is needed to prevent sliding. Above the c.g. the resistance must act in the same direction as P_1, and conversely below. The maximum angle of rotation increases as the point of application of P_1 is raised on the structure.

The location of the center of percussion is dependent on the geometric properties of the structure. It is possible to have a structure of such large width relative to depth that the center of percussion will not lie within the physical boundaries of the structure.

The effect of flexibility within the structure is to reduce the overturning or sliding from that occurring for a rigid structure. For sliding, the structure "filters" out an amount of sliding which is independent of the load characteristics. Conversely, the ability of the

structure to allow access the internal bracing placed on the structure.

Soil which is not restricting vertically will change the maximum angle of rotation from that on rigid ground. Soils which yield appreciably will tend to reduce the maximum angle of rotation from that for rigid ground.

Controlling foundation conditions should be a consideration in blast-resistant structure design. The forces producing deflections within the structure are limited by the foundation reactions.

For a given simple structure a rough analysis or estimate can be made of the type of external and internal behavior to be expected from a specified blast or impulse. The structure may accept a certain amount of energy internally, and expend the rest in sliding or rotating. The external motion most probable can be assumed, using as an aid a graph such as Fig. C-1.

The point of application of the equivalent load must be estimated. Factors affecting its location include the shape of the structure, the number and location of openings, and the resistance or flexibility of surface panels.

APPENDIX A -- NOTATION

The letter symbols and notations used in this thesis are defined as follows:

x, y	= coordinates of c.m. of structure referred to initial rest position; x positive to right, y positive downward.
x_a, y_a	= coordinates of toe A of structure referred to initial rest position; x positive to right, y positive downward.
θ	= clockwise rotation of structure from initial rest position.
θ_a	= θ measured from θ_p.
θ_p	= θ at time t_p.
θ_1, θ_2	= special designations used in section 3.3.3.
B	= half width of structure.
D	= height of c.m. when structure is in initial rest position.
I_m	= mass moment of inertia of structure about its c.m.
k	= stiffness of structure to horizontal load.
K_v	= vertical stiffness of each spring representing the ground.
K.E.	= kinetic energy of structure.
M	= moment.
P_1	= magnitude of blast load.
S	= settlement in springs caused by the weight of the structure.
R_H	= horizontal reaction of ground on structure.
R_{VA}	= vertical reaction of ground on toe A of structure.
R_{VC}	= vertical reaction of ground on toe C of structure.
W	= work done by resisting forces.
c.m.	= center of mass of structure (center of gravity).

APPENDIX A -- NOMENCLATURE (Concluded)

c.p.	=	center of pressure of rigid structure.
d	=	vertical distance between c.m. and c.p.
d'	=	vertical distance from c.m. to point of application of F_1.
f	=	coefficient of resistance for horizontal ground reaction.
f_1	=	minimum value of f which gives overturning only.
f_2	=	maximum value of f which gives sliding only.
g	=	acceleration of gravity.
m	=	mass of structure.
mg	=	weight of structure.
t	=	time.
t_p	=	duration of F_1.
t_a	=	time after F_1 stops.
ρ^2	=	squared radius of gyration of structure about its c.m.
$\bar{\rho}^2$	=	squared radius of gyration of structure about toe A.

APPENDIX I -- BIBLIOGRAPHY

1. Jacobsen, Lydik S.: "Natural Periods of Uniform Cantilever Beams." ASCE Proceedings, March 1930.

2. Jacobsen, Lydik S.: "Dynamic Behavior of Simplified Structures up to the Point of Collapse." UCLA Conference, June 1952.

3. Newmark, N. M.: "Methods of Analysis for Structures Subjected to Dynamic Loading." Directorate of Intelligence, USAF, 1950.

4. Newmark, N. M.: "Analysis and Design of Structures Subjected to Dynamic Loading." MIT Conference on Building in the Atomic Age, 16 June 1952.

5. Newmark, N. M.: "Computation of Dynamic Structural Response in the Range Approaching Failure." UCLA Conference, June 1952.

6. Terzaghi, Karl and Peck, Ralph B.: "Soil Mechanics in Engineering Practice." John Wiley and Sons, New York, 1948.

7. Timoshenko, S.: "Vibration Problems in Engineering." D. Van Nostrand Company, Inc., New York, 1937.

[illegible]

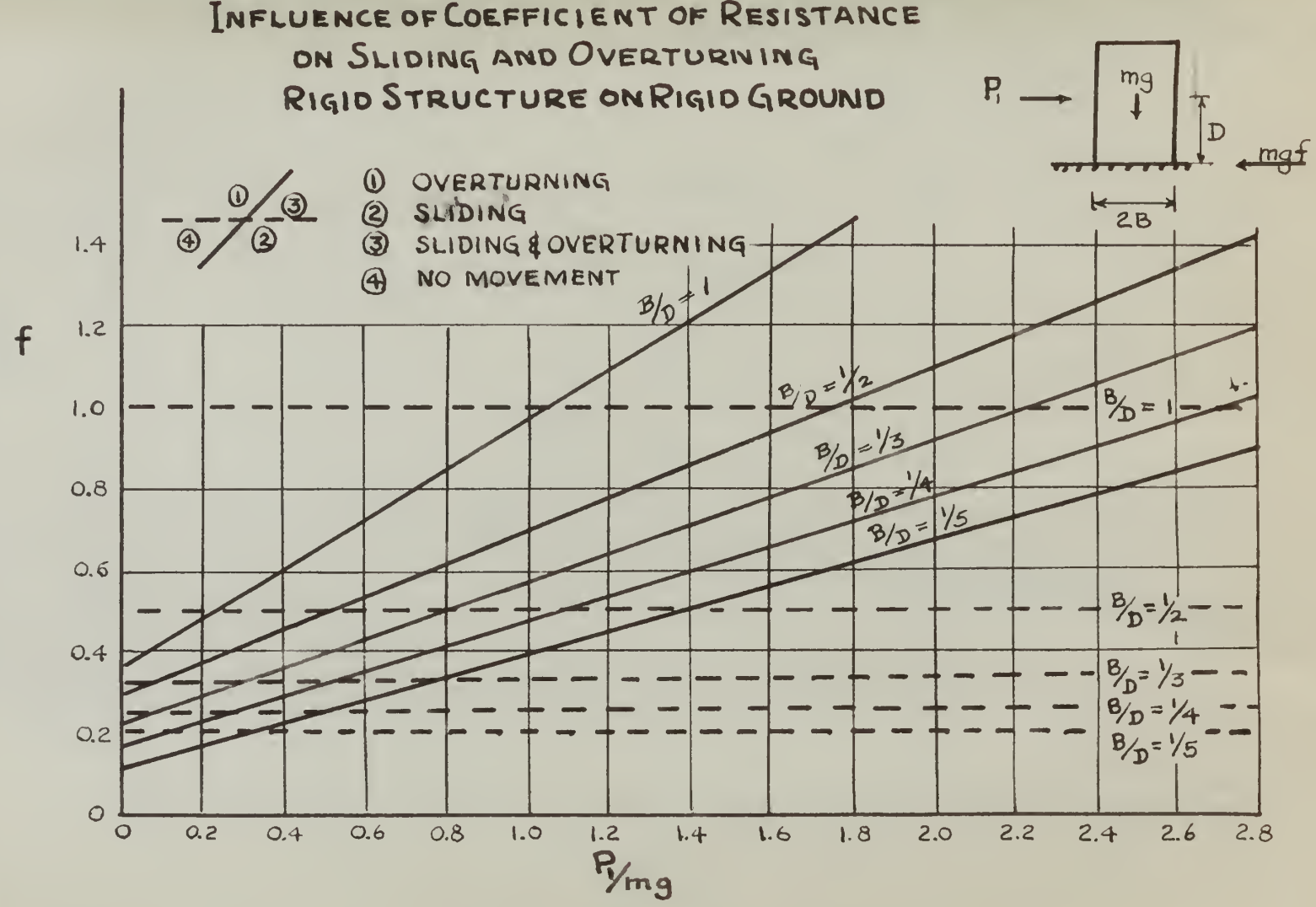
INFLUENCE OF COEFFICIENT OF RESISTANCE
ON SLIDING AND OVERTURNING
RIGID STRUCTURE ON RIGID GROUND
P
mg
D
mgf
2B
① OVERTURNING
② SLIDING
③ SLIDING & OVERTURNING
④ NO MOVEMENT
f
B/D = 1
B/D = 1/2
B/D = 1/3
B/D = 1/4
B/D = 1/5
P/mg

Fig C-1

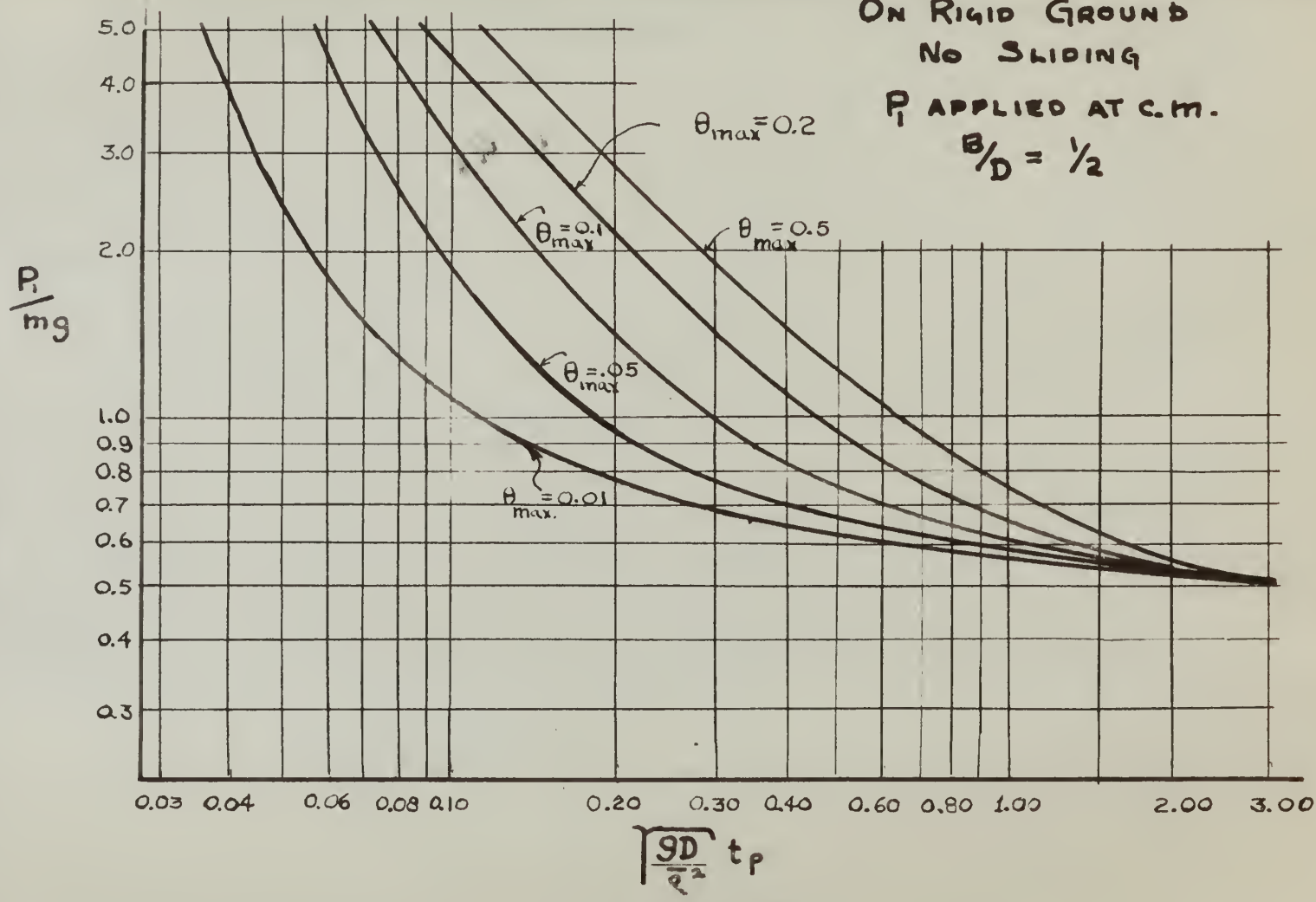
MAXIMUM ROTATION (θ max)
WHICH WILL OCCUR FOR RIGID STRUCTURE
ON RIGID GROUND
NO SLIDING
P1 APPLIED AT C.M.
B/D = 1/2
θmax=0.2
θmax=0.1
θmax=0.5
θmax=.05
θmax=0.01
P1/mg
5.0
4.0
3.0
2.0
1.0
0.9
0.8
0.7
0.6
0.5
0.4
0.3
0.03 0.04 0.06 0.08 0.10 0.20 0.30 0.40 0.60 0.80 1.00 2.00 3.00
√(gD/r²) tp

FIG C-2

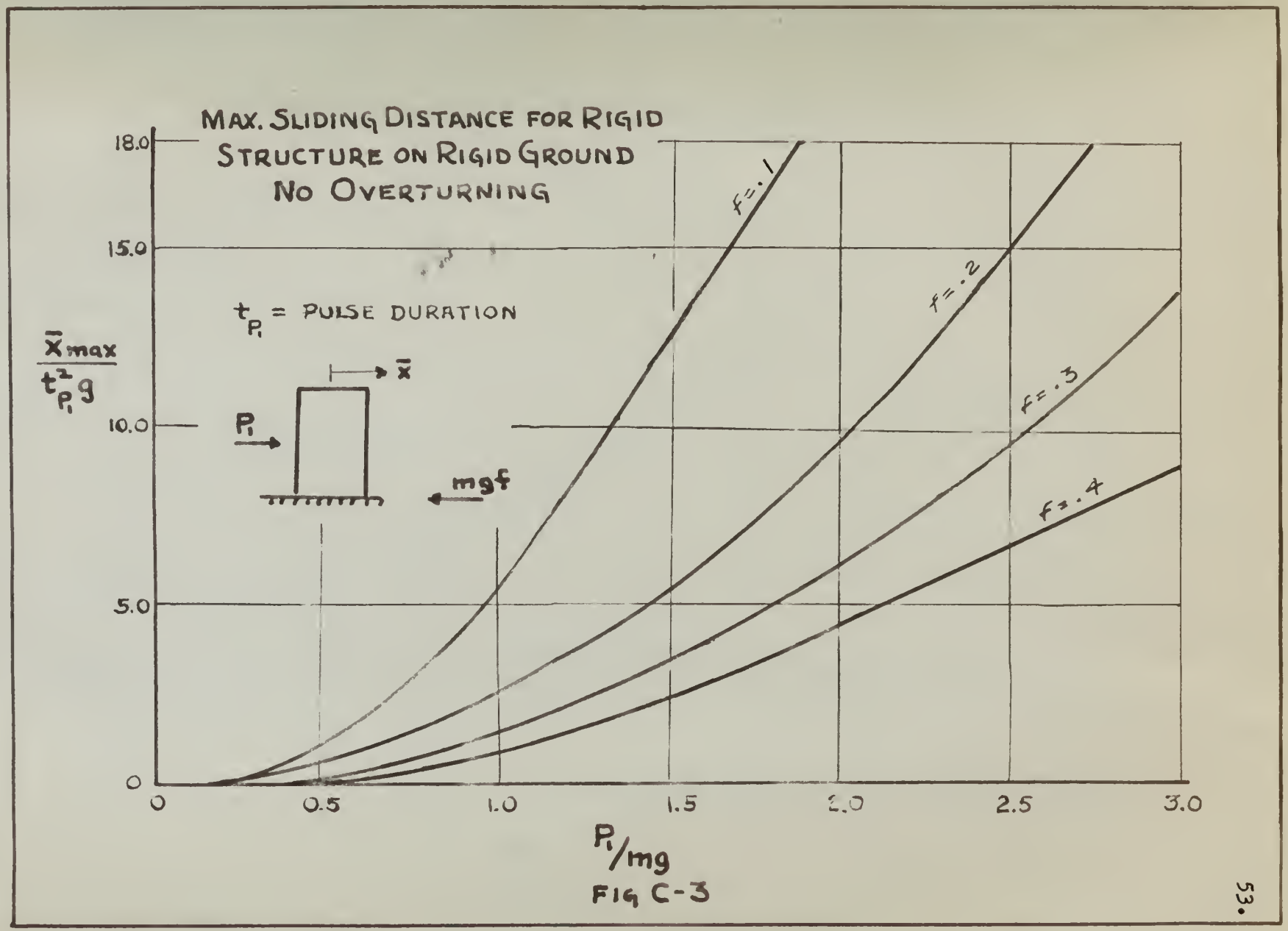
MAX. SLIDING DISTANCE FOR RIGID STRUCTURE ON RIGID GROUND NO OVERTURNING
t_{P_1} = PULSE DURATION
$\frac{\bar{x}_{max}}{t_{P_1}^2 g}$
$\bar{x}$
P_1
mgf
f=.1
f=.2
f=.3
f=.4
18.0
15.0
10.0
5.0
0
0
0.5
1.0
1.5
2.0
2.5
3.0
P_1/mg

FIG C-3

INFLUENCE OF STRUCTURE SHAPE & POINT OF LOAD APPLICATION ON THE NATURE OF HORIZONTAL GROUND REACTION

RIGID STRUCTURE ON RIGID GROUND

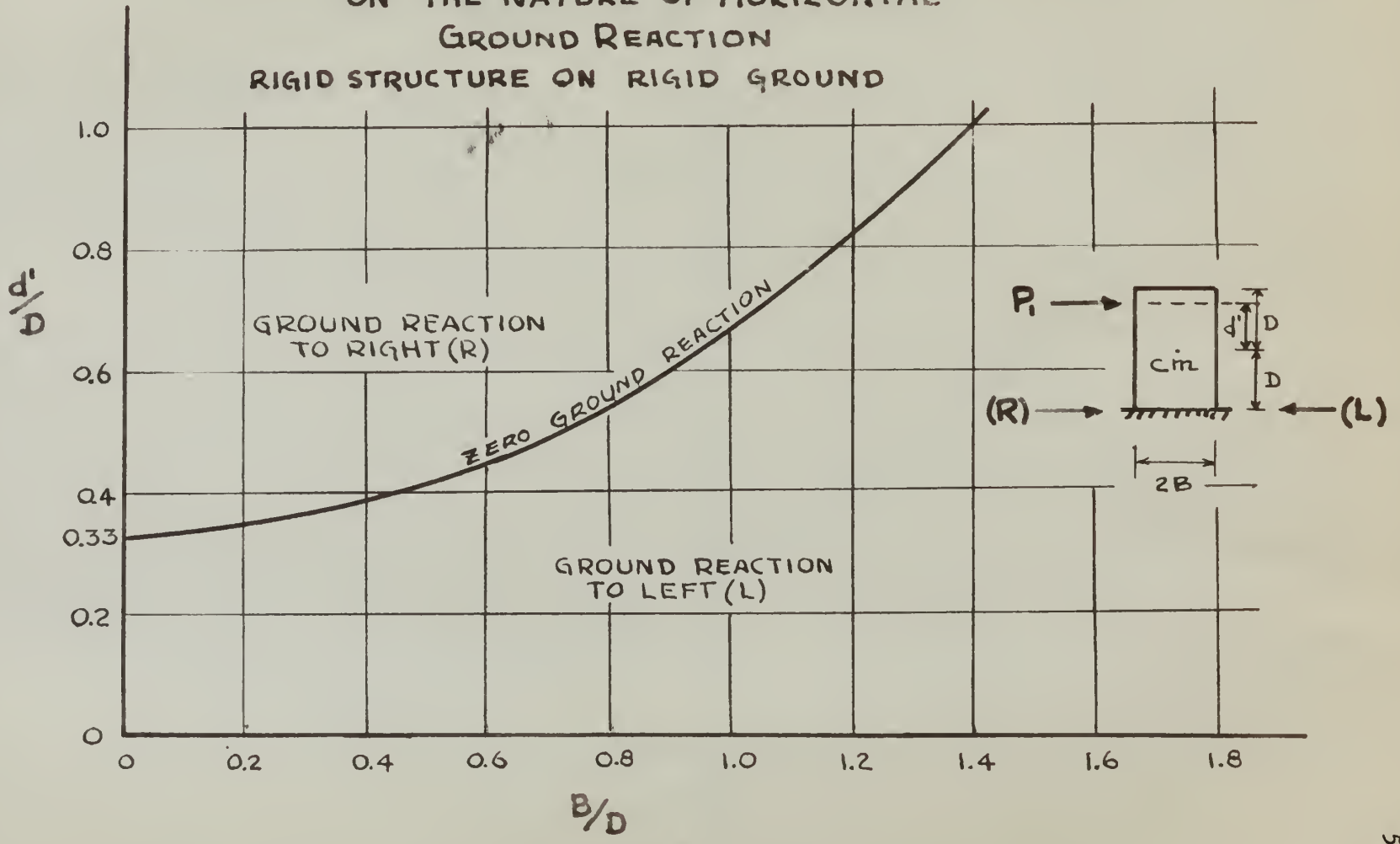

FIG C-4

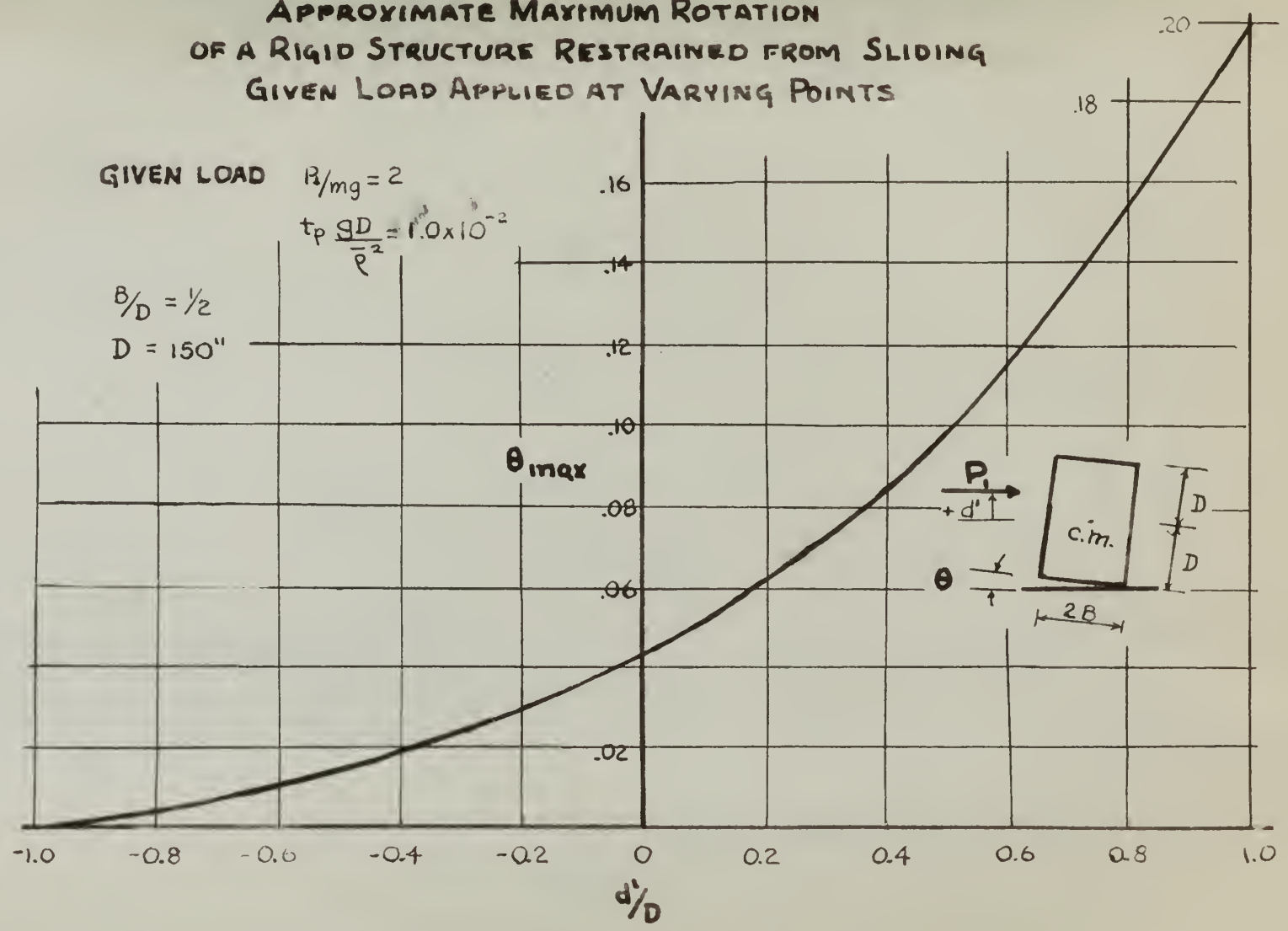
APPROXIMATE MAXIMUM ROTATION
OF A RIGID STRUCTURE RESTRAINED FROM SLIDING
GIVEN LOAD APPLIED AT VARYING POINTS
GIVEN LOAD $P_1/mg = 2$
$t_p \frac{gD}{\bar{r}^2} = 1.0 \times 10^{-2}$
$B/D = 1/2$
D = 150"
θ_{max}
.20
.18
.16
.14
.12
.10
.08
.06
.02
-1.0
-0.8
-0.6
-0.4
-0.2
0
0.2
0.4
0.6
0.8
1.0
d'/D
P_1
d'
c.m.
D
D
θ
2B

FIG C-5

Values of Pulse Magnitude and Duration Which Will Cause Rear Toe to Lift for a Rigid Structure on Yielding Ground

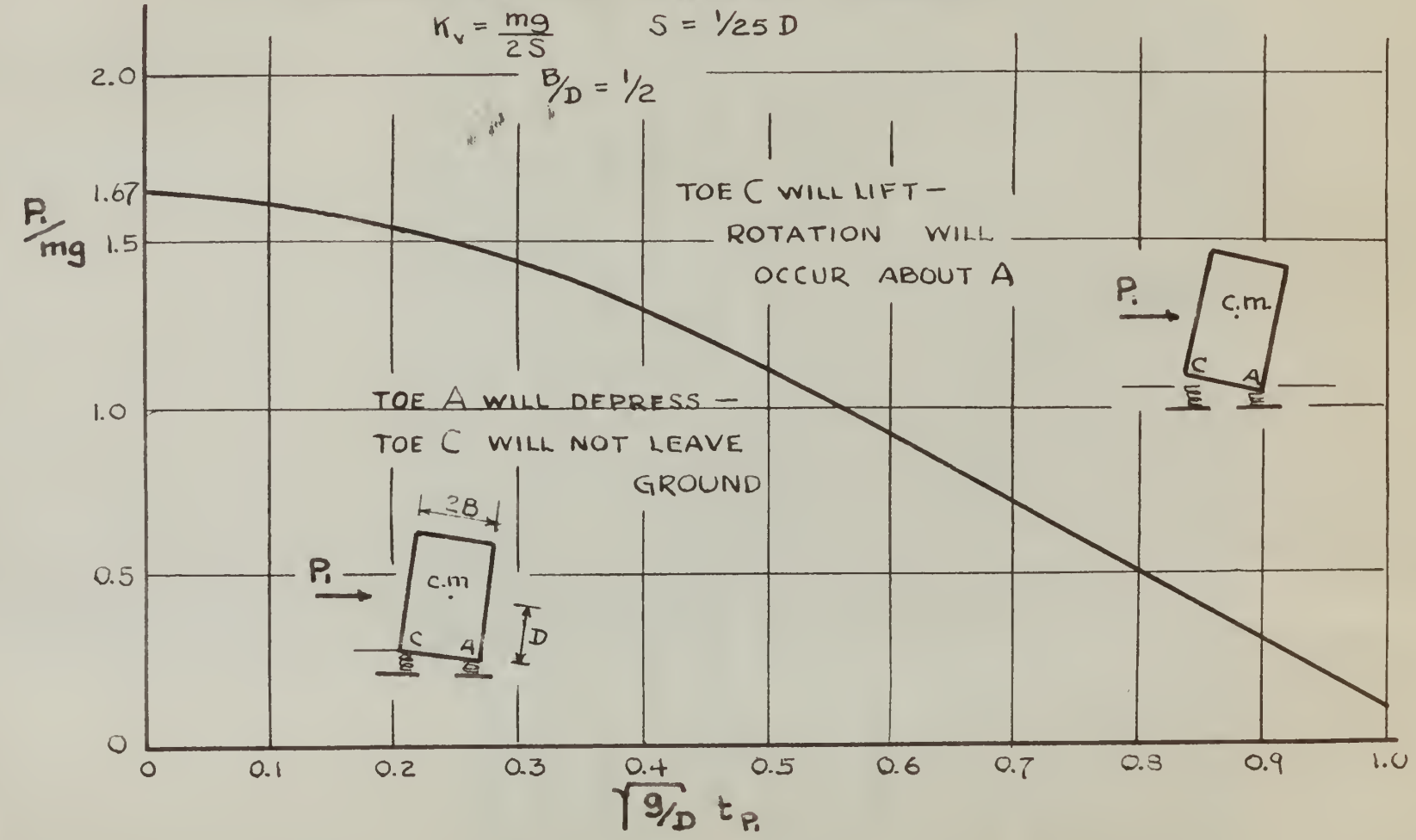

Fig C-6

VITA

John Denton Stoner was born on May 5, 1922 in Portland, Oregon. After two years of study in liberal arts at Oregon State College, he was appointed to the United States Naval Academy at Annapolis, Maryland. He graduated with honors in June, 1944, and received the degree of Bachelor of Science. He served aboard the USS Maryland in the Pacific Theater as a gunnery officer until the end of World War II. In 1946 he was ordered to Rensselaer Polytechnic Institute in Troy, New York for post graduate study in civil engineering. He received the degrees of Bachelor of Civil Engineering in 1947 and Master of Civil Engineering in 1948. There followed various assignments in the Navy Civil Engineer Corps, including public works duty in continental United States and construction contract administration in the Marianas Islands in the Pacific. In 1951 he was ordered to the United States Naval Post Graduate School at Monterey, California for one year of study in radiological defense. In 1952 he was sent by the Navy to the University of Illinois to study structural dynamics.

APR 2
FEB 2
MAY 18
MY 21 56
MY 31 61
BINDERY
RECAT
1039
DISPLAY
1039
1039

23004

Thesis H165 Hammer
The influence of foundation coupling on the dynamic response of simple structures.

BINDERY
RECAT
1039
DISPLAY
1039
1039

FEB 2
MAY 18
MY 21 56
MY 31 61

23004

Thesis H165 Hammer
The influence of foundation coupling on the dynamic response of simple structures.

Library
U. S. Naval Postgraduate School
Monterey, California

thesH165
The influence of foundation coupling on
3 2768 002 07590 5
DUDLEY KNOX LIBRARY